ISSN: 2319-8753

International Journal of Innovative Research in Science, Engineering and Technology
Vol. 2, Issue 4, April 2013

Fire Detection and Notification System in Trains

Kuncham Viswa Teja[1], Suresh Angadi[2]

Final year B.Tech, Dept. of ECE, K L University, Vaddeswaram, A.P, India [1]

Assistant Professor, B.Tech, Dept. of ECE, K L University, Vaddeswaram, A.P, India [2]

Abstract: In this paper, a remedy to reduce the death loss occurring due to fire accidents in trains is presented. Fire on a running train is more catastrophic than on a stationary one, since fanning by winds helps spread the fire to other coaches. When these accidents are occurring in remote areas or during night times the loss or damage being caused is at higher rates. The damage is heavier due to improper reach of service at right time due to improper communication. This time delay is causing heavier damage. Thus, eliminating the time between when an accident occurs and when first responders are dispatched to the scene decreases the damage. This projects help in notifying the passengers and emergency services. The project consists of a microcontroller which is interfaced with the GPS module, GSM modem and fire sensors. Once the sensors attached in the compartments of train senses the smoke detection, it assumes a fire accident. The controller assumes it as an emergency and starts the buzzer, LCD display and GSM modem in the engine sending the latitude and longitude information to the specified mobile number and emergency services, by fetching the information from the GPS.

Keywords: Fire sensors, GSM, GPS, Buzzer, Zigbee.

I. INTRODUCTION

Security in travel is primary concern for everyone. Now a days fire accident are most often occurring in trains. When these accidents are occurring in remote areas or during night times the loss or damage being caused is at higher rates. The damage is heavier due to improper reach of service at right time due to improper communication. This time delay is causing heavier damage. Thus, eliminating the time between when an accident occurs and when first responders are dispatched to the scene decreases the damage. One approach to eliminate the delay is by identifying the fire accident and notifying the concerned authorities, loco pilot and passenger with in no time. Passengers will be notified by ringing the buzzer and loco pilot will be notified showing the message in the LCD display fitted in the engine along with alarm. In the same time the railway authorities and emergency services are notified by sending SMS through GSM service.

II. SYSTEM ARCHITECTURE

Once there is a fire accident, immediately the fire sensor will immediately sense the change in temperature and thus the micro controller is supplied with power supply. When there is no fire accident the ZigBee fire sensors placed in the compartments will send no signal so the micro controller will not work. Thus, once the fire is detected, the ZigBee fire sensors placed in compartments sends a signal and the GPS, GSM, Buzzer, LCD modem which are kept ON all the time will respond. The GPS modem will be continuously tracking and after the identification of fire the longitude and latitude values of that location are stored in memory of the micro controller and the contents are moved to SBUF register of microcontroller and then to the GSM through the transmitter pin. The GSM modem will then send messages to the numbers specified about the accident specifying the latitude and longitude values. At the same time, the buzzer will be ON immediately after the micro controller is supplied with power supply. And also it is displayed in the LCD placed in the engine for loco pilot.

Block Diagram:

AT89C52 microcontroller is interfaced serially to a GSM Modem and GPS Receiver. A GSM modem is used to send the position (Latitude and Longitude) of the vehicle from a remote place. The GPS modem continuously gives the data i.e. Latitude and Longitude indicating the position of the vehicle. The GPS modem gives many parameters as output, but only NMEA data coming out is read and displayed on the LCD. The same data is sent to the mobile at the other end from where the position of the vehicle is demanded. An EEPROM is used to store the mobile number. The hardware interfaces to microcontroller are LCD display GSM modem and GPS receiver. The design uses RS 232 protocol for serial communication between modems and microcontroller. A serial driver IC is used for converting TTL voltage levels into RS 232 voltage levels.

ISSN: 2319-8753

International Journal of Innovative Research in Science, Engineering and Technology
Vol. 2, Issue 4, April 2013

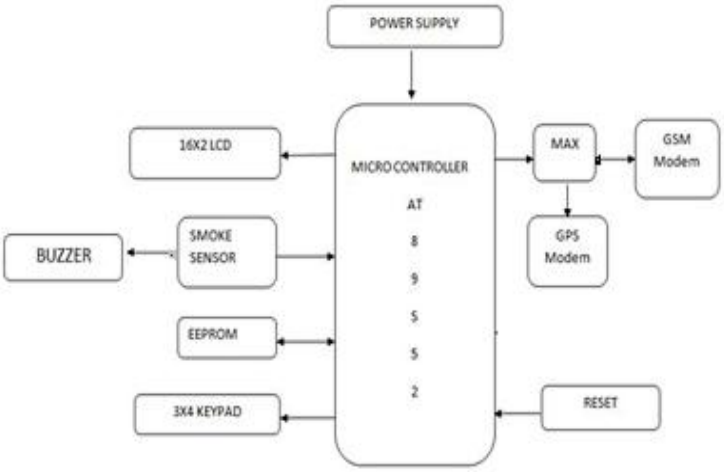

III. HARDWARE DESIGN

A. The Information Detection Module

Information detection module consists of ZigBee fire sensors installed in every compartment of train. Whenever fire accident occurs any of the ZigBee fire sensors placed in compartments of train senses and immediately it sends signals to the microcontroller in engine. Fire sensors also consist of modern sprinkler systems.

A wireless sensor network, which combines computer and communication technology with the technology of sensor network, is considered to be one of the emerging technology that will affect the future of human civilization. This network is composed of numerous and ubiquitous micro sensor nodes which have the ability to communicate and calculate. These nodes can monitor, sense and collect information of different environments and various monitoring objects cooperatively.

ZigBee is a low-rate, low-cost and low-power kind of short range wireless network communication protocol. Compared with other wireless technologies, ZigBee has unique advantages of safe and reliable data transmission, an easy and flexible network configuration, low equipment costs and long-lasting batteries. Thus, it has great development potential and a promising market application in the field of industrial control. By applying a wireless sensor network based on ZigBee to a train fire detection system, information such as temperature and humidity at any place of the train is covered by the network could easily be collected, dealt with and analyzed at any time. In addition, the system can be extended significantly, the cost of equipment maintenance could be reduced and the whole system could be optimized.

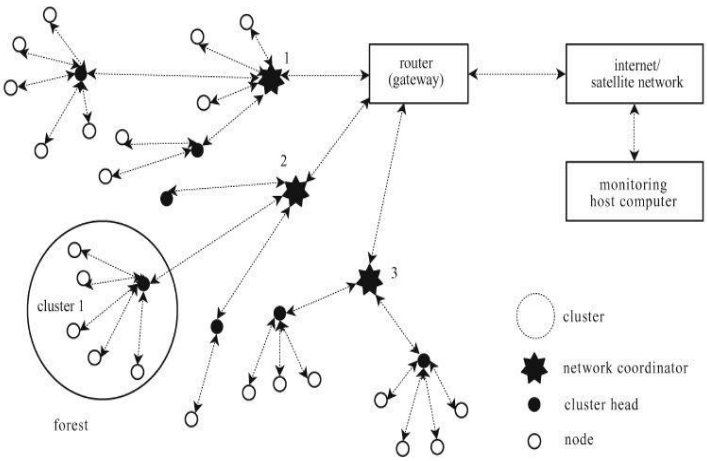

Fig. 1 Structure of a wireless sensor network for forest fire detection based on ZigBee technique

ISSN: 2319-8753

International Journal of Innovative Research in Science, Engineering and Technology
Vol. 2, Issue 4, April 2013

B. GPS Location Module

GPS location module GS-87 is the third generation of GPS receiver chip designed by the United States SiRF star III company, which consists of a radio frequency integrated circuit, a digital signal processing circuit and standard embedded GPS software composition.

C. Message Transmission Module GSM

Global system for mobile communication (GSM) is a globally accepted standard for digital cellular communication. GSM is the name of a standardization group established in 1982 to create a common European mobile telephone standard that would formulate specifications for a pan-European mobile cellular radio system operating at 900 MHz frequency. Cellular is one of the fastest growing and most demanding telecommunications applications. GSM (Global System for Mobile communication) is a digital mobile telephony system that is widely used in Europe and other parts of the world. GSM uses a variation of time division multiple access (TDMA) and is the most widely used of the three digital wireless telephony technologies (TDMA, GSM, and CDMA). GSM digitizes and compresses data, then sends it down a channel with two other streams of user data, each in its own time slot. It operates at either the 900 MHz or 1800 MHz frequency band.

The structure of a GSM network:

The network is structured into a number of discrete sections:

The *Base Station Subsystem* (the base stations and their controllers).

The *Network and Switching Subsystem* (the part of the network most similar to a fixed network). This is sometimes also just

called the core network.

The *GPRS Core Network* (the optional part which allows packet based Internet connections).

The *Operations support system (OSS)* for maintenance of the network.

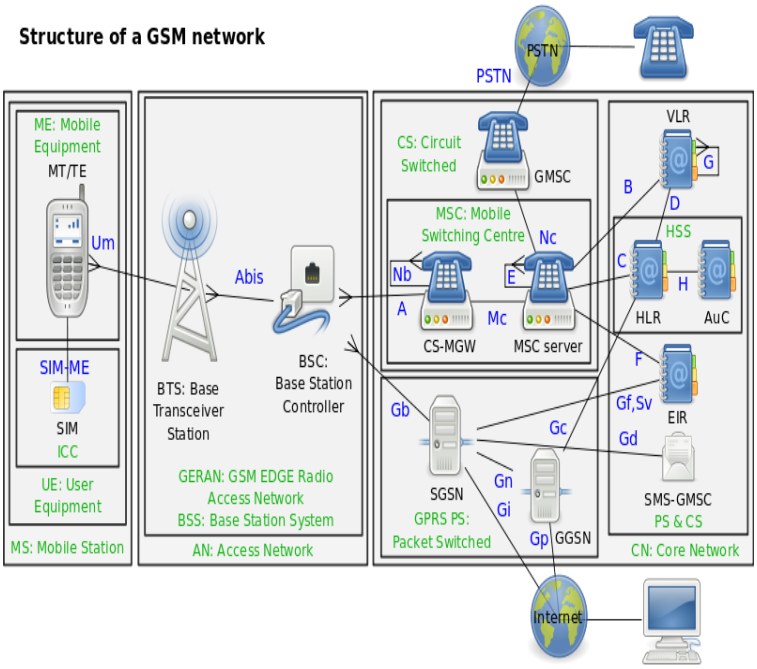

IV. SCHEMATIC DIAGRAM

A. Power Supply Design

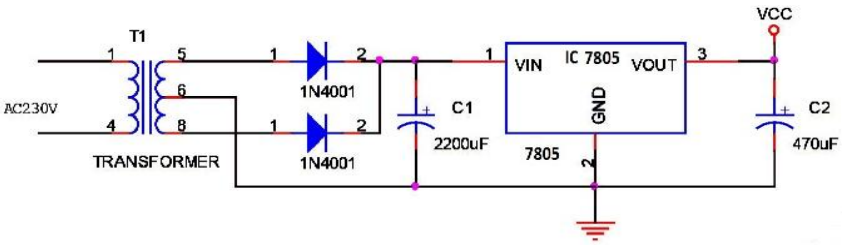

ISSN: 2319-8753

International Journal of Innovative Research in Science, Engineering and Technology
Vol. 2, Issue 4, April 2013

B. Complete Schematic

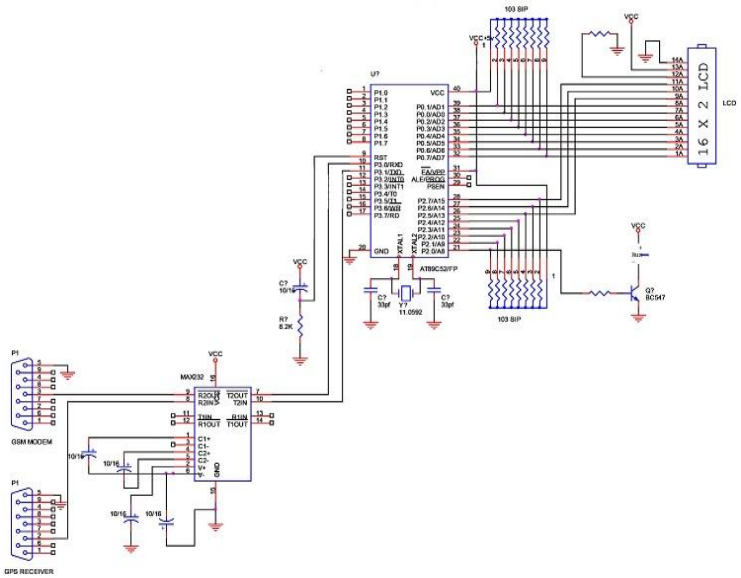

V. CONCLUSION

Here two technologies are used, at first ZigBee technology is used to sense or detect the fire and information is transferred to microcontroller in engine. Then GSM technology is used to transmit information about accident to concerned railway authorities and emergency services like police ambulance etc.

REFERENCES

[1] Muhammad Ali Mazidi, Janice G. Mazidi, Rolin D. McKinlay, *The 8051 Microcontroller and Embedded Systems Using Assembly and C*, 2nd ed.
[2] The IEEE website. [Online]. Available: http://www.ieee.org/
[3] GSM. [Online]. Available: http://www.gsma.com/home/
[4] ZigBee Alliance Official Site, [online]. Available: www.zigbee.org.
[5] Rajesh, N.N.Ramesh and S.M.Prakhya 2010. Wireless vehicular accident detection and notification system. International conference on mechanical and electrical technology.
[6] M.Rajendra Prasad, P.Aswani Kumari, "An Automated Traffic Accident Detection and Alarm Device", published in IJTEL.
[7] GSM. [Online]. Available: http://en.wikipedia.org/wiki/GSM
[8] Wireless sensor networks to detect forest fires. [Online]. Available: http://www.libelium.com/wireless_sensor_networks_to_detec_forest_fires/
[9] Zigbee. [Online]. Available: http://en.wikipedia.org/wiki/ZigBee
[10] Zigbee Technology. [Online]. Available: http://latestemergingtechnology.blogspot.in/2009/09/zigbee-technology.html
[11] A.P.Godse, D.A.Godse, *Microprocessors And Microcontrollers*, 6th edition, Technical Publications Pune.

BIOGRAPHY

Kuncham Viswa Teja[1] was born in 1992 in Visakhapatnam District. He is currently pursing B.Tech Electronics and Communication degree from K L University. He is interested in Tele-Communication and Embedded Systems.
Correspondence Author: Kuncham Viswa Teja

Suresh Angadi[2] is presently working as a Asst.Professor in K L University. He received his B.Tech degree in electronics and communication in G.V.P College of Engineering, vizag, 2007 and completed M.Tech in Maulana Azad National Institute of Technology (MACT) in 2009, Bhopal. He has published SEVEN international journals of repute.

.

MICROCONTROLLER BASED LPG GAS DETECTOR USING GSM MODULE

Ashish Sharma (B.Tech., EL Engg.)

E-mail: ashishpreet2009@gmail.com

: contactashish10@gmail.com

ABSTRACT

Ideal gas sensor is used to detect the presence of a dangerous LPG leak in your car or in a service station, storage tank environment. This unit can be easily incorporated into an alarm unit, to sound an alarm or give a visual indication of the LPG concentration. The sensor has excellent sensitivity combined with a quick response time. The sensor can also sense iso-butane, propane, LNG and cigarette smoke.

If the LPG sensor senses any gas leakage from storage the output of this sensor goes low. This low signal is monitored by the microcontroller and it will identify the gas leakage. Now the microcontroller is turn on LED and Buzzer. After few milliseconds delay, it also turn on exhaust fan for throwing gas out and continue send messages as 'GAS LEAKAGE' to a mobile no. , written in c-code.

INTRODUCTION

MQ-5 Semiconductor Sensor for Combustible Gas Sensitive material of MQ-5 gas sensor is SnO_2, which with lower conductivity in clean air. When the target combustible gas exist, the sensors conductivity is higher along with the gas concentration rising. We use simple electro-circuit, convert change of conductivity to correspond output signal of gas concentration. MQ-5 gas sensor has high sensitivity to Methane, Propane and Butane and could be used to detect both Methane and Propane. The sensor could be used to detect different combustible gas especially Methane, it is with low cost and suitable for different application.

BLOCK DIAGRAM

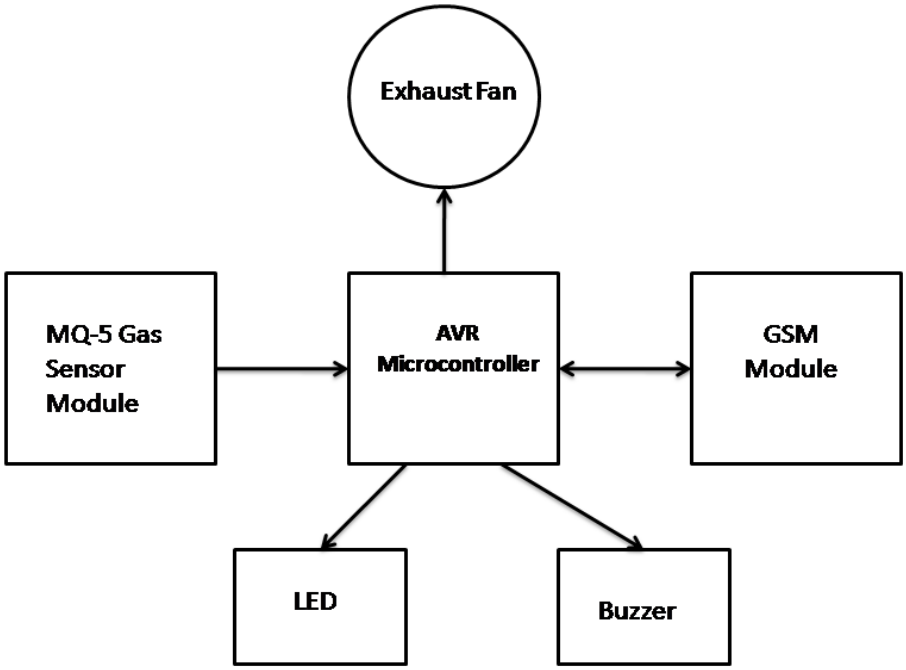

BLOCK DIAGRAM DESCRIPTION

MQ-5 LPG SENSOR

It senses the leakage of LPG. The out put of this sensor is 'high' at normal condition. The output goes low, when it senses the LPG.

MICROCONTROLLER

It is the whole control of the project. It controls the Exhaust fan, LED, Buzzer and when LPG leak occurs. The input/ output ports of the microcontroller is used for this.

EXHAUST FAN

This is used to send out the LPG to space and then the concentration of LPG is reduced.

Buzzer

When buzzer is blowing, this indicates the leakage of LPG gas. It is 12 V DC operated buzzer.

LED

When LED is glowing, this indicates the leakage of LPG gas. It is 1.2 V DC operated LED.

MQ-5 LPG GAS DETECTOR MODULE

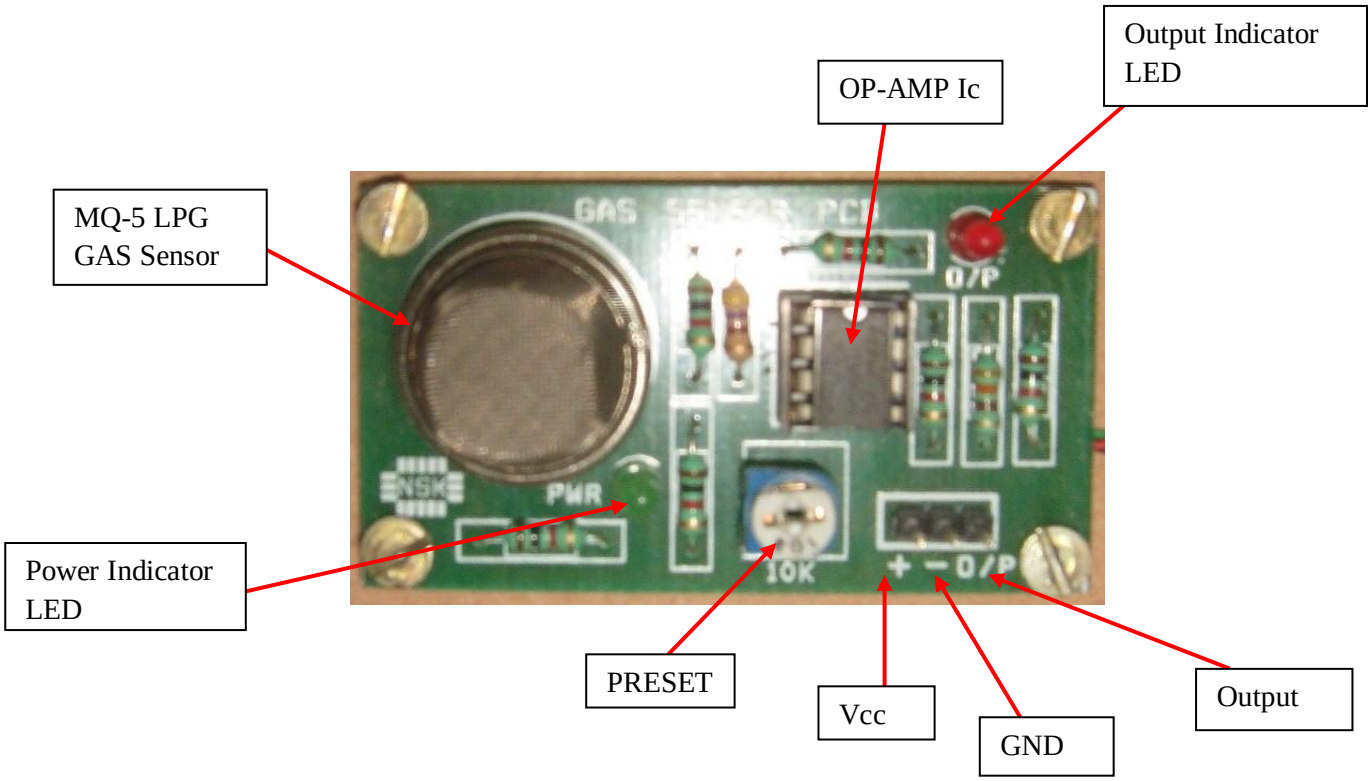

SPECIFICATIONS OF MQ-5 LPG GAS SENSOR

SPECIFICATIONS

A. Standard work condition

Symbol	Parameter name	Technical condition	Remarks
Vc	Circuit voltage	5V±0.1	AC OR DC
V_H	Heating voltage	5V±0.1	ACOR DC
P_L	Load resistance	20KΩ	
R_H	Heater resistance	31±10%	Room Tem
P_H	Heating consumption	less than 800mw	

B. Environment condition

Symbol	Parameter name	Technical condition	Remarks
Tao	Using Tem	-10℃-50℃	
Tas	Storage Tem	-20℃-70℃	
R_H	Related humidity	less than 95%Rh	
O_2	Oxygen concentration	21%(standard condition)Oxygen concentration can affect sensitivity	minimum value is over 2%

C. Sensitivity characteristic

Symbol	Parameter name	Technical parameter	Remarks
Rs	Sensing Resistance	10KΩ - 60KΩ (5000ppm methane)	Detecting concentration scope: 200-10000ppm LPG,LNG Natural gas, iso-butane, propane Town gas
α (5000ppm/1000 ppm CH_4)	Concentration slope rate	≤0.6	
Standard detecting condition	Temp: 20℃±2℃ Humidity: 65%±5%	Vc:5V±0.1 Vh: 5V±0.1	
Preheat time	Over 24 hour		

D. Strucyure and configuration, basic measuring circuit

	Parts	Materials
1	Gas sensing layer	SnO_2
2	Electrode	Au
3	Electrode line	Pt
4	Heater coil	Ni-Cr alloy
5	Tubular ceramic	Al_2O_3
6	Anti-explosion network	Stainless steel gauze (SUS316 100-mesh)
7	Clamp ring	Copper plating Ni
8	Resin base	Bakelite
9	Tube Pin	Copper plating Ni

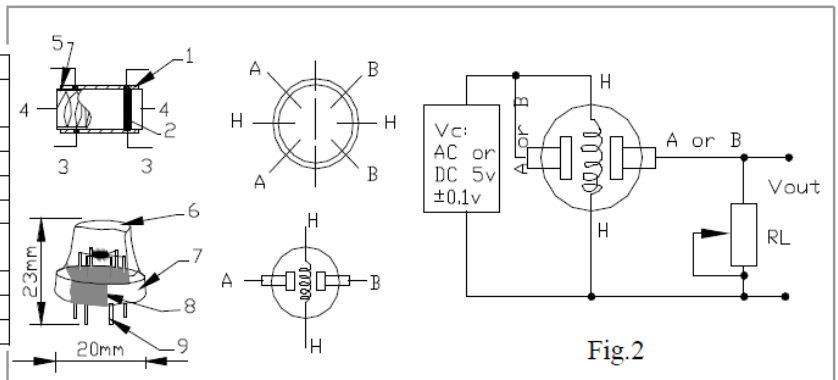

Fig. 1

Fig.2

Electric parameter measurement circuit is shown as Fig.2

E. Sensitivity characteristic curve

Fig.2 sensitivity characteristics of the MQ-5

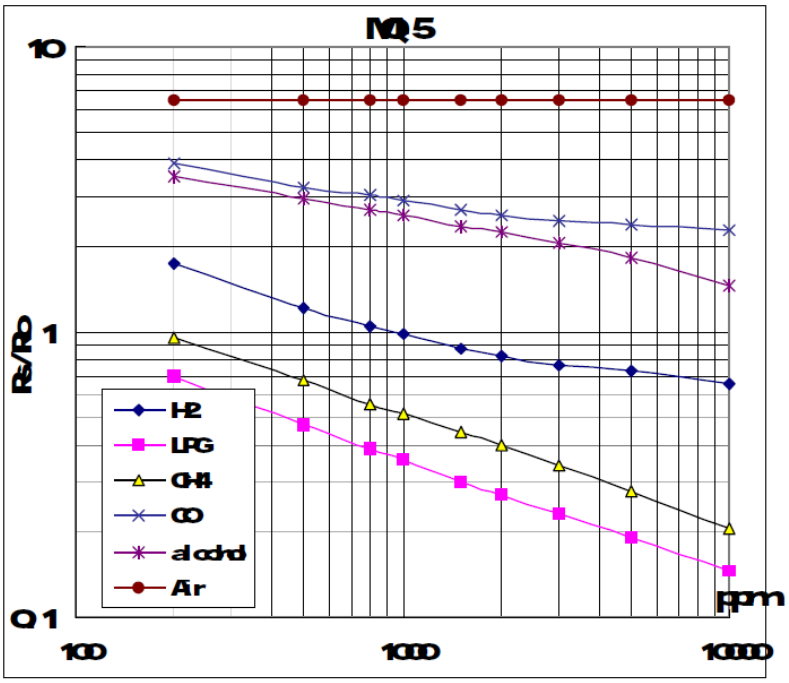

Fig.3 is shows the typical sensitivity characteristics of the MQ-5 for several gases.
in their: Temp: 20℃、
Humidity: 65%、
O_2 concentration 21%
RL=20kΩ
Ro: sensor resistance at 1000ppm of H_2 in the clean air.
Rs:sensor resistance at various concentrations of gases.

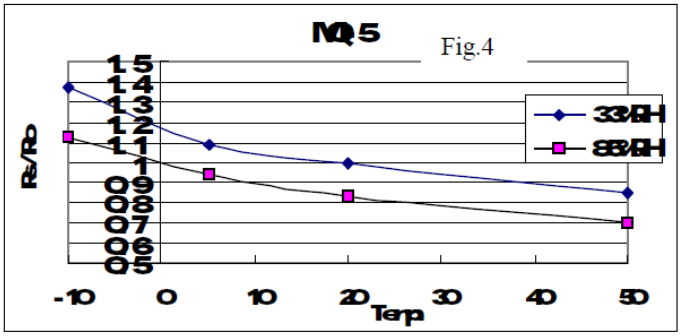

Fig.4 is shows the typical dependence of the MQ-5 on temperature and humidity.
Ro: sensor resistance at 1000ppm of H_2 in air at 33%RH and 20 degree.
Rs: sensor resistance at different temperatures and humidities.

SENSITVITY ADJUSTMENT

Resistance value of MQ-5 is difference to various kinds and various concentration gases. So, When using this components, sensitivity adjustment is very necessary. we recommend that you calibrate the detector for 1000ppm H_2 or LPG concentration in air and use value of Load resistance (R_L) about 20 KΩ (10KΩ to 47KΩ).

When accurately measuring, the proper alarm point for the gas detector should be determined after considering the temperature and humidity influence.

WORKING PRINCIPLE

The sensing material in TGS gas sensors is metal oxide, most typically SnO2. When a metal oxide crystal such as SnO2 is heated at a certain high temperature in air, oxygen is adsorbed on the crystal surface with a negative charge. Then donor electrons in the crystal surface are transferred to the adsorbed oxygen, resulting in leaving positive charges in a space charge layer. Thus, surface potential is formed to serve as a potential barrier against electron flow.

Inside the sensor, electric current flows through the conjunction parts (grain boundary) of SnO2 micro crystals. At grain boundaries, adsorbed oxygen forms a potential barrier which prevents carriers from moving freely. The electrical resistance of the sensor is attributed to this potential barrier. In the presence of a deoxidizing gas, the surface density of the negatively charged oxygen decreases, so the barrier height in the grain boundary is reduced. The reduced barrier height decreases sensor resistance.

ATMEGA16 MICROCONTROLLER DETAILS

DESCRIPTION

The ATMEGA16 is a low-power, high-performance CMOS 8-bit microcomputer with 16K bytes of Flash programmable and erasable read only memory (EPROM). The device is manufactured using Atmel's high-density nonvolatile memory technology and is compatible with the industry-standard MCS-51 instruction set and pin out. The on-chip Flash allows the program memory to be reprogrammed in-system or by a conventional nonvolatile memory programmer. By combining a versatile 8-bit CPU with Flash on a monolithic chip, the Atmel ATMEGA16 is a powerful microcomputer which provides a highly-flexible and cost-effective solution to many embedded control applications.

PIN OUT

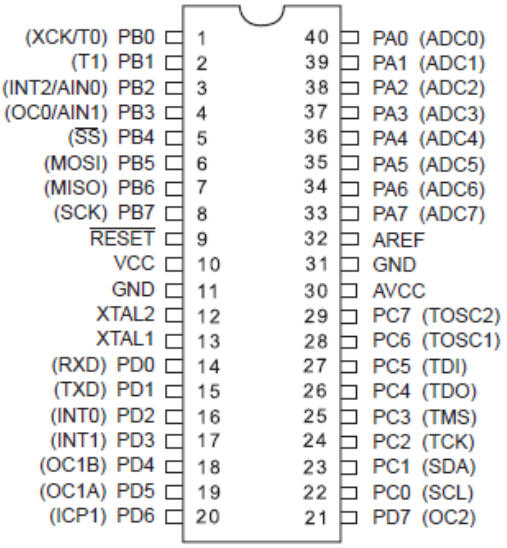

FEATURES OF ATMEGA16

Features

- High-performance, Low-power AVR® 8-bit Microcontroller
- Advanced RISC Architecture
  - 131 Powerful Instructions – Most Single-clock Cycle Execution
  - 32 x 8 General Purpose Working Registers
  - Fully Static Operation
  - Up to 16 MIPS Throughput at 16 MHz
  - On-chip 2-cycle Multiplier
- High Endurance Non-volatile Memory segments
  - 16K Bytes of In-System Self-programmable Flash program memory
  - 512 Bytes EEPROM
  - 1K Byte Internal SRAM
  - Write/Erase Cycles: 10,000 Flash/100,000 EEPROM
  - Data retention: 20 years at 85°C/100 years at 25°C[1]
  - Optional Boot Code Section with Independent Lock Bits
    In-System Programming by On-chip Boot Program
    True Read-While-Write Operation
  - Programming Lock for Software Security
- JTAG (IEEE std. 1149.1 Compliant) Interface
  - Boundary-scan Capabilities According to the JTAG Standard
  - Extensive On-chip Debug Support
  - Programming of Flash, EEPROM, Fuses, and Lock Bits through the
- Peripheral Features
  - Two 8-bit Timer/Counters with Separate Prescalers and Compare M
  - One 16-bit Timer/Counter with Separate Prescaler, Compare Mode, Mode
  - Real Time Counter with Separate Oscillator
  - Four PWM Channels
  - 8-channel, 10-bit ADC
    - 8 Single-ended Channels
    - 7 Differential Channels in TQFP Package Only
    - 2 Differential Channels with Programmable Gain at 1x, 10x, or 20
  - Byte-oriented Two-wire Serial Interface
  - Programmable Serial USART
  - Master/Slave SPI Serial Interface
  - Programmable Watchdog Timer with Separate On-chip Oscillator
  - On-chip Analog Comparator
- Special Microcontroller Features
  - Power-on Reset and Programmable Brown-out Detection
  - Internal Calibrated RC Oscillator
  - External and Internal Interrupt Sources
  - Six Sleep Modes: Idle, ADC Noise Reduction, Power-save, Power-d and Extended Standby
- I/O and Packages
  - 32 Programmable I/O Lines
  - 40-pin PDIP, 44-lead TQFP, and 44-pad QFN/MLF
- Operating Voltages
  - 2.7 - 5.5V for ATmega16L
  - 4.5 - 5.5V for ATmega16
- Speed Grades
  - 0 - 8 MHz for ATmega16L
  - 0 - 16 MHz for ATmega16
- Power Consumption @ 1 MHz, 3V, and 25°C for ATmega16L
  - Active: 1.1 mA
  - Idle Mode: 0.35 mA
  - Power-down Mode: < 1 µA

MICROCONTROLLER CIRCUIT WITH PHERIPHERALS

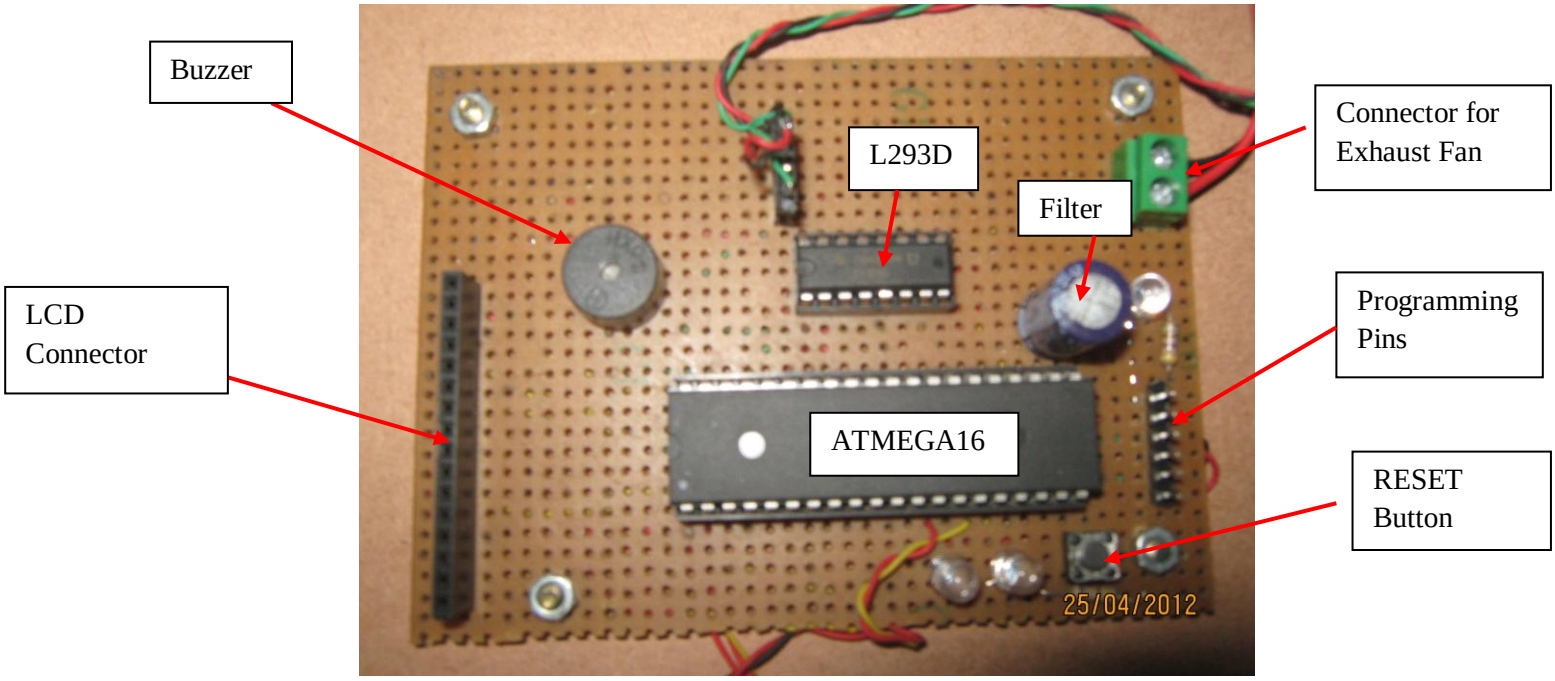

(**NOTE:** For more details of ATMEGA16, please refer datasheet.)

GSM MODULE

For sending message, I am using a GSM Module named SIMCOM_300. GSM Module SIM300 with sim-card holder, RS232 interface, power supply, buzzer and audio interface. You can connect this to PC using a USB to Serial Adaptor and use terminal programs such as Real term to send & receive data. We can also interface GSM Module with microcontroller directly through wires.

GSM Module works with AT COMMANDS. **AT commands** are used to control MODEMs. AT is the abbreviation for Attention.

AT commands with a GSM/GPRS MODEM or mobile phone can be used to access following information and services:

1. Information and configuration pertaining to mobile device or MODEM and SIM card.
2. SMS services.
3. MMS services.
4. Call services.
5. Data and Voice link over mobile network.

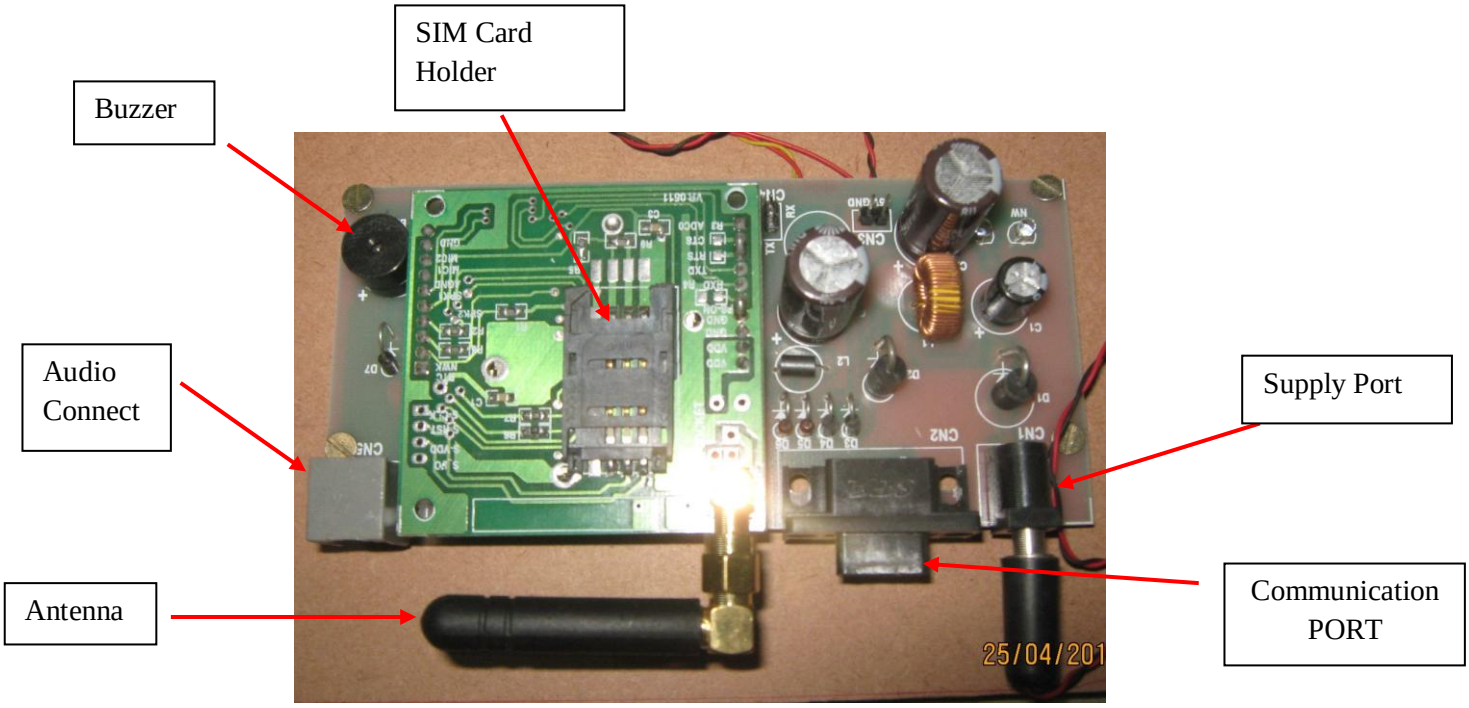

SIMCOM_300

(**NOTE:** For more details of SIMCOM_300 GSM Module, please refer datasheet.)

EXPLANATION OF COMMONLY USED AT COMMANDS

1) **AT** - This command is used to check communication between the module and the computer.
For example,
AT
OK
The command returns a result code OK if the computer (serial port) and module are connected properly. If any of module or SIM is not working, it would return a result code ERROR.

2) **+CMGF** - This command is used to set the SMS mode. Either text or PDU mode can be selected by assigning 1 or 0 in the command.
SYNTAX: AT+CMGF=<mode>
0: for PDU mode
1: for text mode

The text mode of SMS is easier to operate but it allows limited features of SMS. The PDU (protocol data unit) allows more access to SMS services but the operator requires bit level knowledge of TPDUs. The headers and body of SMS are accessed in hex format in PDU mode so it allows availing more features.

For example,
AT+CMGF=1

OK

3) **+CMGW -** This command is used to store message in the SIM.
SYNTAX: AT+CMGW=" Phone number"> Message to be stored Ctrl+z
As one types AT+CMGW and phone number, '>' sign appears on next line where one can type the message. Multiple line messages can be typed in this case. This is why the message is terminated by providing a 'Ctrl+z' combination. As Ctrl+z is pressed, the following information response is displayed on the screen.

+CMGW: Number on which message has been stored

4) **+CMGS -** This command is used to send a SMS message to a phone number.
SYNTAX: AT+CMGS= serial number of message to be send.

As the command AT+CMGS and serial number of message are entered, SMS is sent to the particular SIM.
For example,
AT+CMGS=1
OK

5) **ATD -** This command is used to dial or call a number.
SYNTAX: ATD<Phone number>(Enter)
For example,
ATD123456789

6) **ATA -** This command is used to answer a call. An incoming call is indicated by a message 'RING' which is repeated for every ring of the call. When the call ends 'NO CARRIER' is displayed on the screen.
SYNTAX: ATA(Enter)

As ATA followed by enter key is pressed, incoming call is answered.
For example,
RING
RING
ATA

7) **ATH -** This command is used to disconnect remote user link with the GSM module.
SYNTAX: ATH (Enter)

CONNECTION BETWEEN MICROCONTROLLER AND GSM MODULE

For connection, connect Receiver Pin (Rx) of Microcontroller to Transmitter Pin (Tx) of GSM Module and Transmitter Pin (Tx) of Microcontroller to Receiver Pin (Rx) of GSM Module. Also connect Ground Pin (GND) of both.

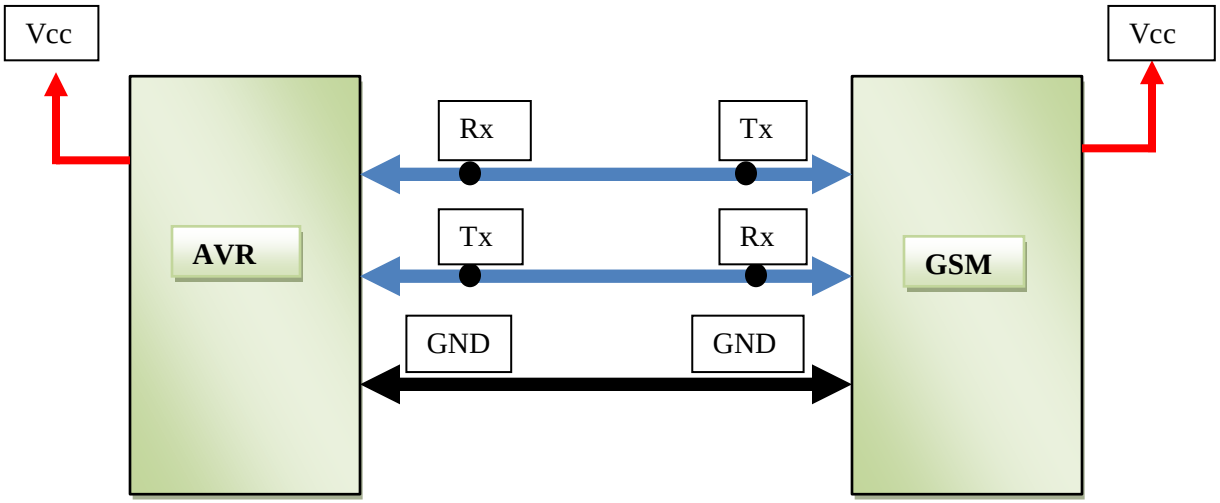

POWER SUPPLY

Power supply for the complete unit can be derived from the mains using a step-down transformer of 230V AC primary to 0-12V, 500mA secondary. A full- wave rectifier followed by a capacitor filter is the output voltage and feeds it to the 5-volt regulator (LM7805) whose output is used to the power supply requirements of microcontroller circuit, other IC's.

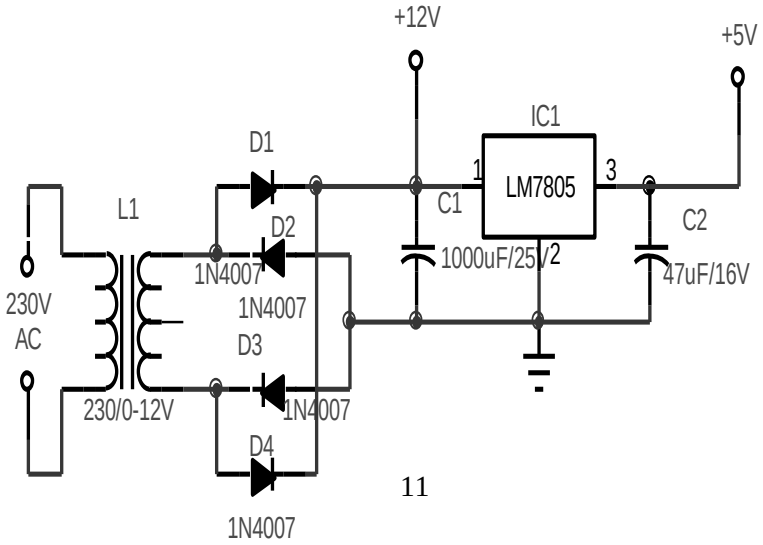

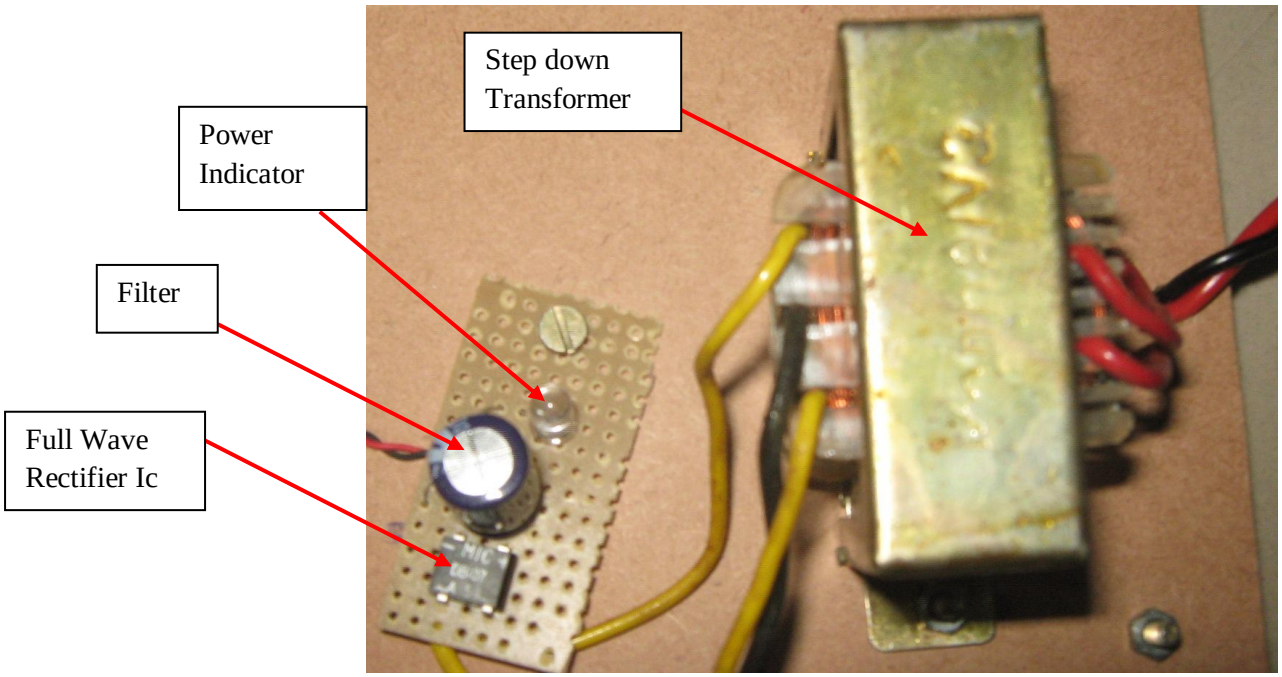

COMPLETE CONNECTION DIAGRAM

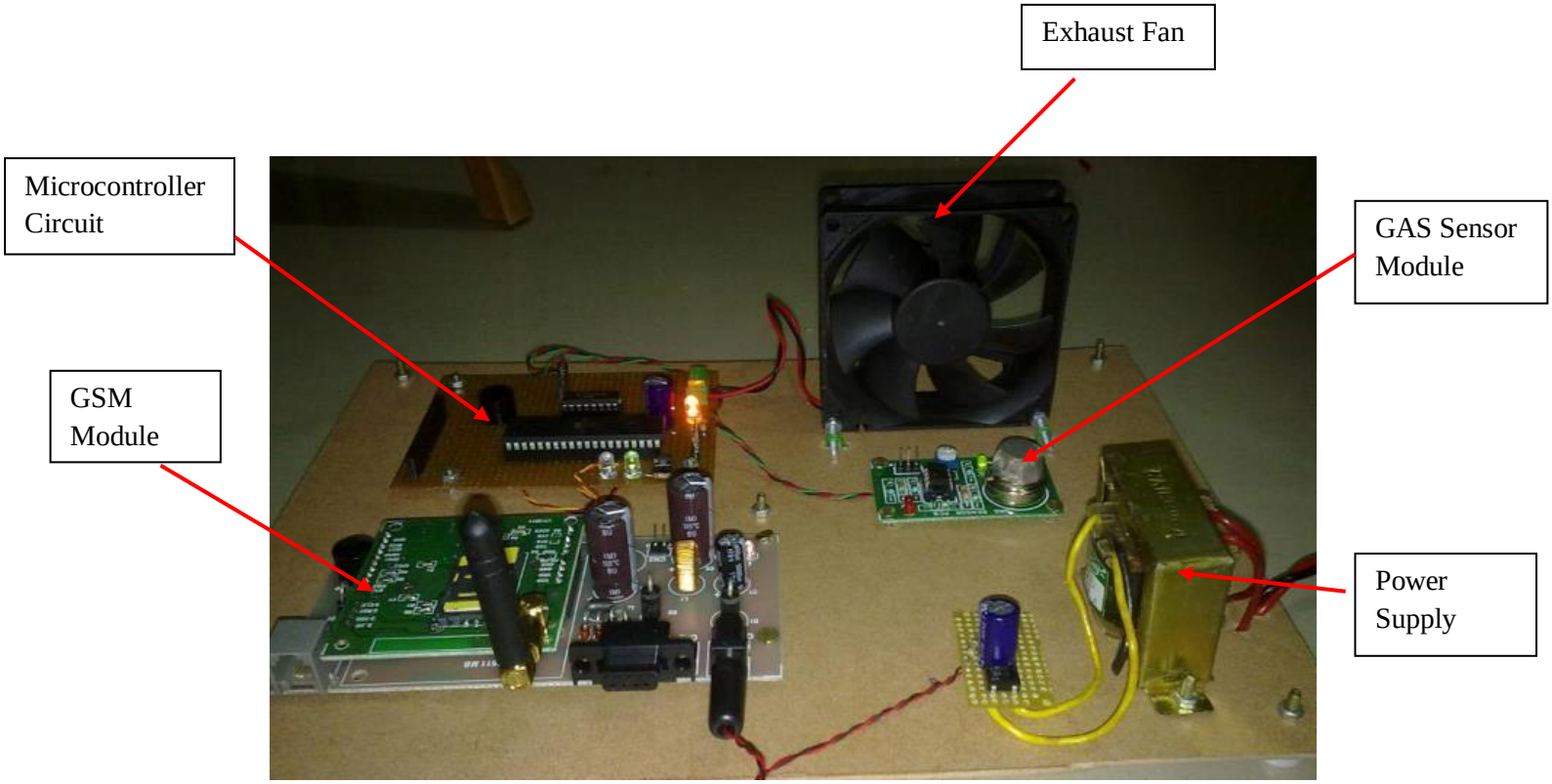

SCHEMATIC DIAGRAM

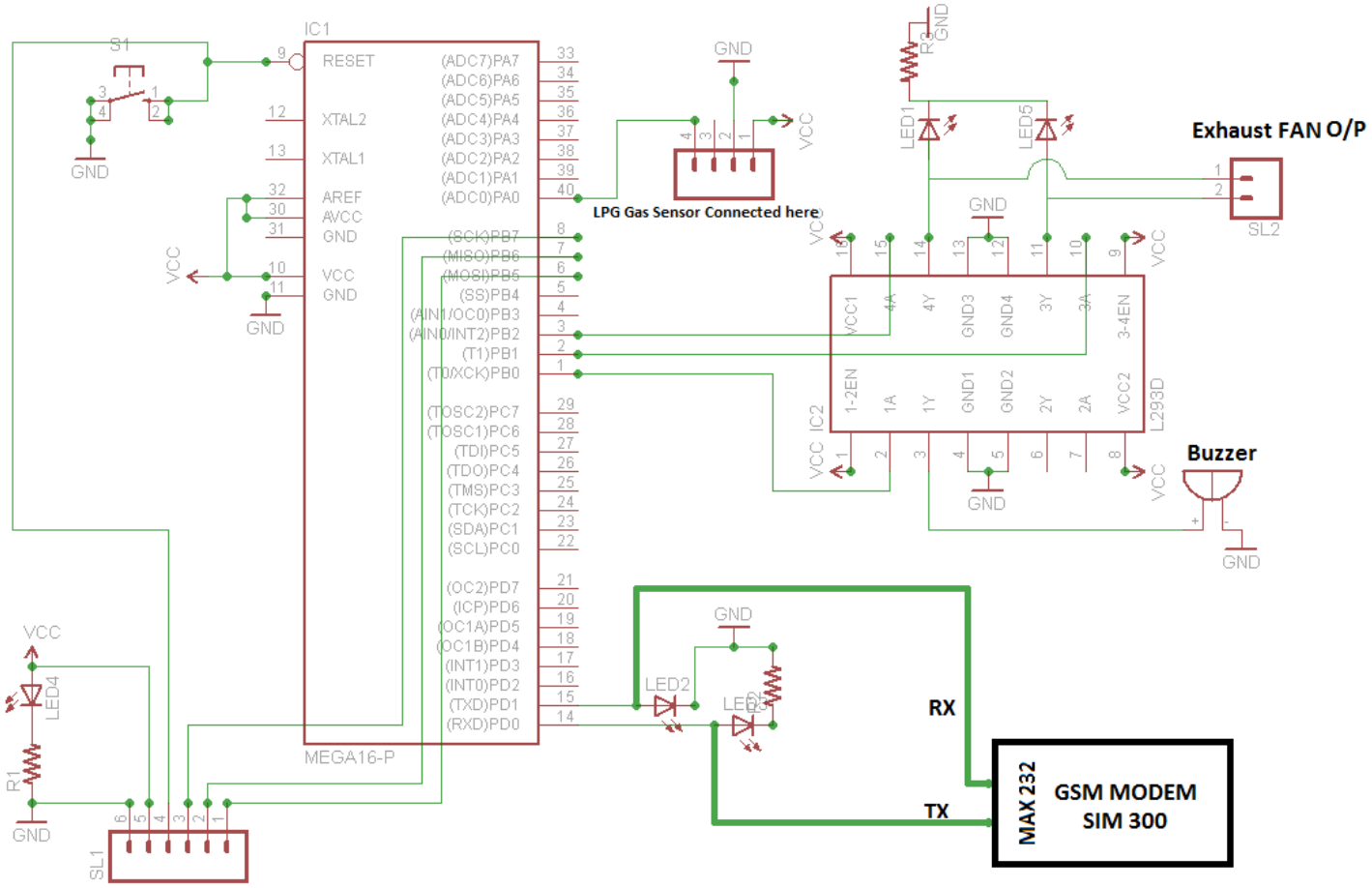

FLOW CHART DIAGRAM

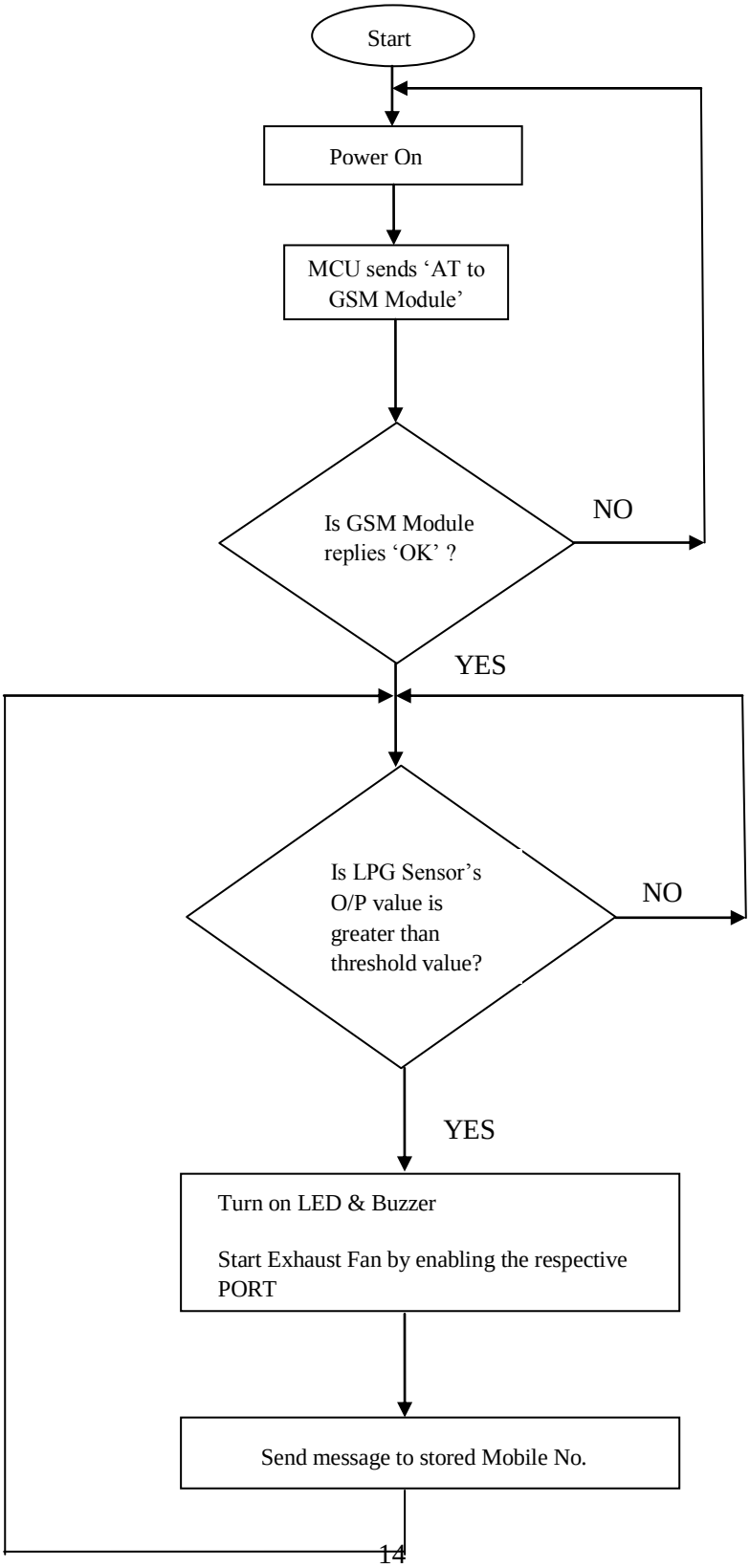

APPLICATIONS

This project is applicable in following fields:

1. Domestic gas leakage detector
2. Industrial Combustible gas detector
3. Portable gas detector
4. Homes
5. Factories
6. LPG storage
7. Gas cars
8. Hotels etc.

CONCLUSION

I have finally succeeded in making the "**MICROCONTROLLER BASED LPG GAS DETECTOR USING GSM MODULE**" Satisfactorily. More knowledge is gained and more experiences are faced lot of information's are collected ultimately, I have concluded with a great pleasure for achieving our aim.

I have planned to fulfill my technical requirements. The knowledge I have attained with this project really would follow till the end of our career.

GPS and GSM modem Integration for Public Transport Management Services

K.Bhaskar

Abstract: This paper proposes the solution for improving the services provided by the transport management by using GPS and GSM modem integration. The system mainly consists of three modules. (1) Bus station module (2) Bus module (3) Base station module. The modules are connected to PC and GSM modem. The initial information containing the bus number and license plate from bus station module is sent to bus module and base station module using SMS. The location of the bus and number of passengers in the bus is transmitted to the base station with the help of the microcontroller based bus module, consisting mainly of GPS receiver and GSM modem. The base station module consists of a microcontroller unit and GSM modems interfaced to PC's so that to track the records of every bus, processes user request about a particular bus location out of bus station and updates buses location. Hence the transport service department needs to check the performance and services provided by them to common people. This developed system will help common people to use more services of transport management.

Keywords- GPS, GSM, public transportation management services, Bus Station Module, In-BUS Module, BASE Station Module, BUS Stop Module, rush statistical analysis.

I. INTRODUCTION

With the increasing population in places like metropolitan cities the problem of transportation services has been increased. The non availability of information about buses arrival schedule, people have to wait for longer time in bus stops especially in working hours and in office hours. Sometimes this leads to overload of buses. These are the regions where buses are more overloaded. The solution to the problem lies in increasing the number of buses on routes which are densely crowded or introduce new overlapping routes to compensate the demand. BASE station transmits the statistical data along with the recommendation report to Transportation Department through internet at the end of day or as per request of transportation department.

In this paper, a transportation management system is developed for enhancing public transportation services based on integration of GPS and GSM. GPS is used as a positioning device while GSM is used as communication link between different modules. These modules include BUS Station Module, Bus Module and Base Station Module.

Bus Station Module contains a GSM engine interfaced to PC and transmits the bus index and its license plate number to BASE Station. At the same time, it turns on GPS receiver installed in the bus. The bus then starts transmitting its location to the BASE Station. The BASE Station comprises of a GSM engine interfaced to a microcontroller for processing user request of bus location as well as a number of other GSM engines interfaced to various PCs each reserved for a separate bus to update the location information of that bus. The buses location data from BASE Station is sent to each bus stop.

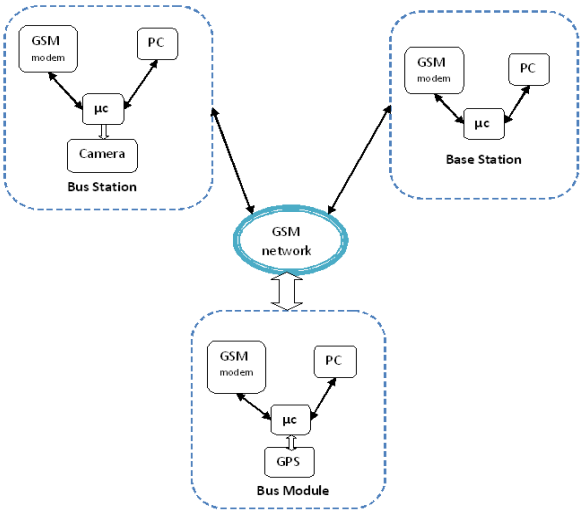

Figure 1. Block Diagram of Transportation Management System

II. HARDWARE SPECIFICATION

The following hardware components are used in building the entire system.

A. *GPS Receive*

The GPS is a satellite-based navigation system that sends and receives radio signals. GPS (Global Positioning System) technology is used to find the location of any object or vehicle to monitor a child continuously using satellite signals. Three satellite signals are necessary to locate the receiver in 3D space and fourth satellite is used for time accuracy. GPS will give the information of parameters like longitude, latitude and attitude. With the help of these parameters one can easily locate the position of any object. In this GPS technology, the communication takes place between GPS transceiver and GPS satellite. A GPS receiver acquires these signals and provides you with information. Using GPS technology, you can determine location, velocity, and time, 24 hours a day, in any

weather conditions anywhere in the world for free. At least 24 GPS satellites orbit the earth twice a day in a specific pattern. They travel at approximately 7,000 miles per hour about 12,000 miles above the earth's surface. These satellites are spaced so that a GPS receiver anywhere in the world can receive signals from at least four of them. GPS technology has many amazing applications on land, at sea, and in the air. You might be surprised to learn about the following examples of how people or professions are already using GPS technology.

B. *GSM Modem*

GSM, the Global System for Mobile communications, is a digital cellular communications system, which has rapidly gained acceptance and market share worldwide, although it was initially developed in a European context. In addition to digital transmission, GSM incorporates many advanced services and features, including ISDN compatibility and worldwide roaming in other GSM networks. The advanced services and architecture of GSM have made it a model for future third-generation cellular systems, such as UMTS.

This paper will give an overview of the services offered by GSM, the system architecture; the radio transmission.GSM (Global System for Mobile communications) is the technology that underpins most of the world's mobile phone networks. The GSM platform is a hugely successful wireless technology and an unprecedented story of global achievement and cooperation. GSM has become the world's fastest growing communications technology of all time and the leading global mobile standard, spanning 218 countries. GSM is an open, digital cellular technology used for transmitting mobile voice and data services. GSM operates in the 900MHz and 1.8GHz bands GSM supports data transfer speeds of up to 9.6 kbps, allowing the transmission of basic data services such as SMS.

C. *Microcontroller*

Arm7 microcontroller is selected because it is a powerful microcomputer which has low power consumption and provides a highly flexible and cost-effective solution to many embedded control applications. It has 8kB to 40kB of on-chip static RAM and 32kB to 512kB of on-chip flash memory. Embedded ICE RT and Embedded Trace interfaces offer real-time debugging with the on-chip Real Monitor software and high-speed tracing of instruction execution. Two 32-bit timers/external event counters (with four captures and four compare Channels each), PWM unit (six outputs) and watchdog.

D. *Battery Backup*

Bus Module is provided with an internal battery so that whenever power from main battery is disconnected, microcontroller continues to transmit the location to BASE station. A message is also sent to BASE station to notify it about the disconnection of main battery. When the power is resumed, the internal battery begins to recharge.

E. Alarms

The microcontroller unit in BUS Module sends different alarm signals for different events to BASE Station Module.

1) On Backup Battery: When the main battery is switched off, a notification is sent to BASE station.
2) Stoppage: When the bus is stationary for more than a specified time, BASE station is informed by a stoppage alarm. In case of an accident or any other fault occurred in bus, the driver can notify the BASE station by pressing a button in bus.
3) Getting Late: When the bus is not covering a certain distance in a defined range of time, an alarm signal of getting late is sent to BASE station.
4) Route Deviation: When the bus deviates from the assigned route by a given margin, BASE station is notified

III. SYSTEM MODULES AND NETWORK OPERATION

The entire system/network comprises of three modules: BUS Station Module, BUS Module, BASE Station Module and the working and interconnection of these modules is described in this section.

A. BUS Station Module

BUS Station Module consisting of a LASER sensor and a GSM modem which are connected to PC. This module is installed at bus terminal form where the bus starts initially. When the bus enters the terminal pad, it is detected by the LASER sensor. The terminal operator enters the license plate number in database. A count number is then accordingly assigned to the bus e.g., bus leaving the terminal first will be assigned a number 1. The route number of bus along with the direction information, assigned count number and license plate number is sent to the BASE Station via GSM. An example of the transmitted header is of the form "113V01LZR7240" where '113' is the bus route number issued by Government Transportation Department, 'V' is the name of place where the bus goes '01' is the count number

assigned to the bus and 'LZR7240' is license plate number of bus. An 'ON' signal is also transmitted to the In-BUS Module installed in the bus for initialization.

BUS station module is having camera to catch the thief. This camera is rotated with the help of a motor connected through the microcontroller and displays it in the PC.

B. BUS Module

A BUS Module is installed inside every bus and consists of a, GSM modem, infrared object counting sensors, door opening/closing sensors, an emergency button and GPS receiver. These all are interfaced to microcontroller. The initialization signal received form BUS Station Module, starts transmitting bus location to the BASE Station. When the driver opens the door, at each stop an interrupt is generated and microcontroller starts counting the numbers of passengers entering and leaving the bus with the help of infrared sensors. This information or count value on per stop basis is transmitted to the BASE Station.

In case of an emergency situation i.e. when some problem occurs in bus, driver can press the emergency button to inform BUS and BASE Station units about the location of bus. The BUS station operator can then adjust the schedule accordingly and send an additional bus for facilitating the passengers. Microcontroller present in this module continuously calculates the difference in consecutive GPS locations. If the difference remains near zero for more than a designated time, then a getting late message is transmitted to the BUS and BASE stations.

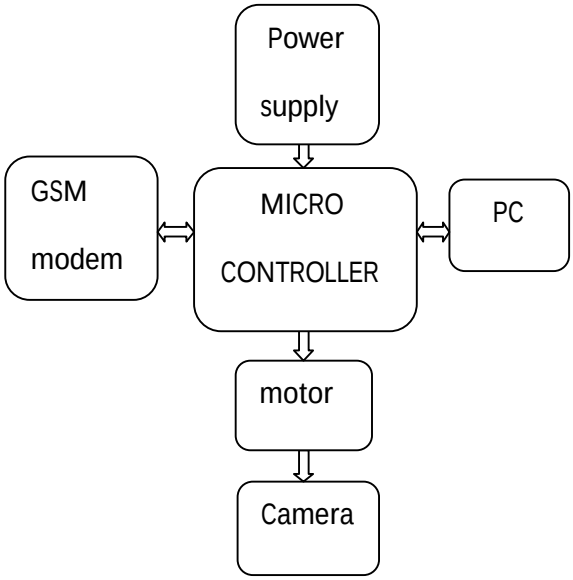

Fig.2. Block diagram of Bus Station

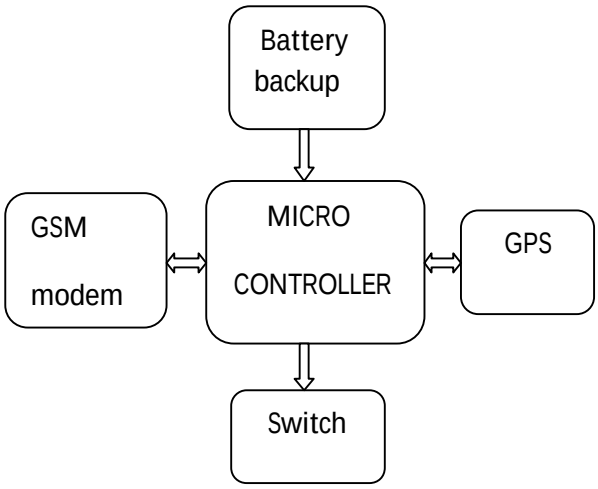

Fig.3. Block diagram of Bus module

In case of sparse GSM coverage, location information is stored in memory unit. After regaining the GSM network, previous locations are updated to the BASE station.

C. BASE Station Module

This module is the central part of the network. It also receives the number of passengers entering and leaving the bus on per stop basis from BUS Module for statistical analysis. The message received is of the form "20, 10, 2345.3522N, 09022.0288E". The first two digits tells us about the number of passengers entering and leaving the bus respectively and next two digit denotes the location information; all separated by commas. Where Another GSM modem is used to get the user request of location information of a particular bus. An example of the query put by the passenger is of the form "33V" or "113V10". In first instance i.e., "113V", '113' is the route number and 'V' designates the direction flag while in second instance i.e., "113V10", additional digit '10' denotes the bus stop number where the passenger is standing. The GSM modem attached to microcontroller passes on the user request to the PC dedicated for that route number. After processing the request data the PC sends desired location information in form of bus stop name to microcontroller. The microcontroller then transmits this information back to the user. The information received by the passenger contains the location of all buses out of terminal in desired direction in former query while in case of later query, he will get the location of those buses which are coming towards the particular bus stop number in desired direction along with time information. The time information is embedded in message to account for any delay in processing the user request. The emergency situations are also monitored by base station which is transmitted from BUS Module. In addition to this, the bus station keeps record of security

issues and traffic congestion conditions and directs the driver to change the route if needed.

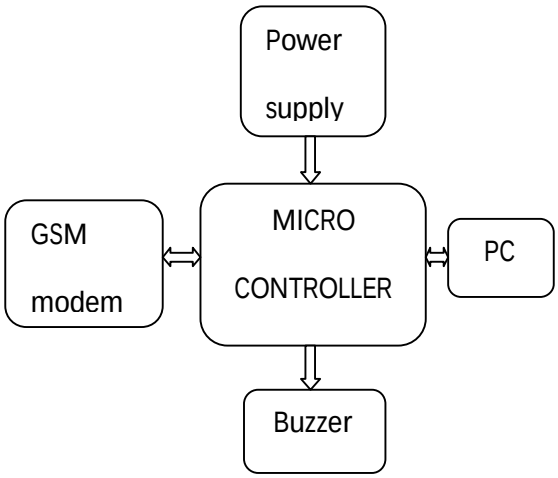

Fig.4. Block diagram of BASE Station.

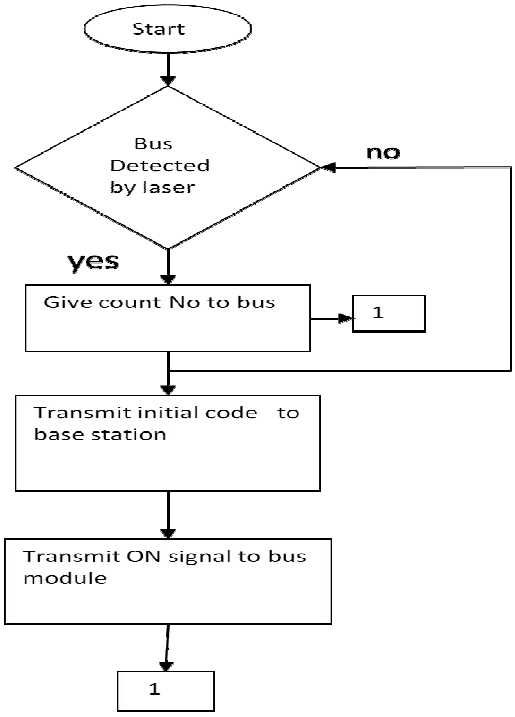

Fig. 5. Flow Chart for BUS Station Module

BASE Station Module equipped with a microcontroller unit and GSM modems interfaced to PCs is designed to keep track record of every bus, processes user request about a particular bus location out of BUS Station and updates buses location on bus stops.

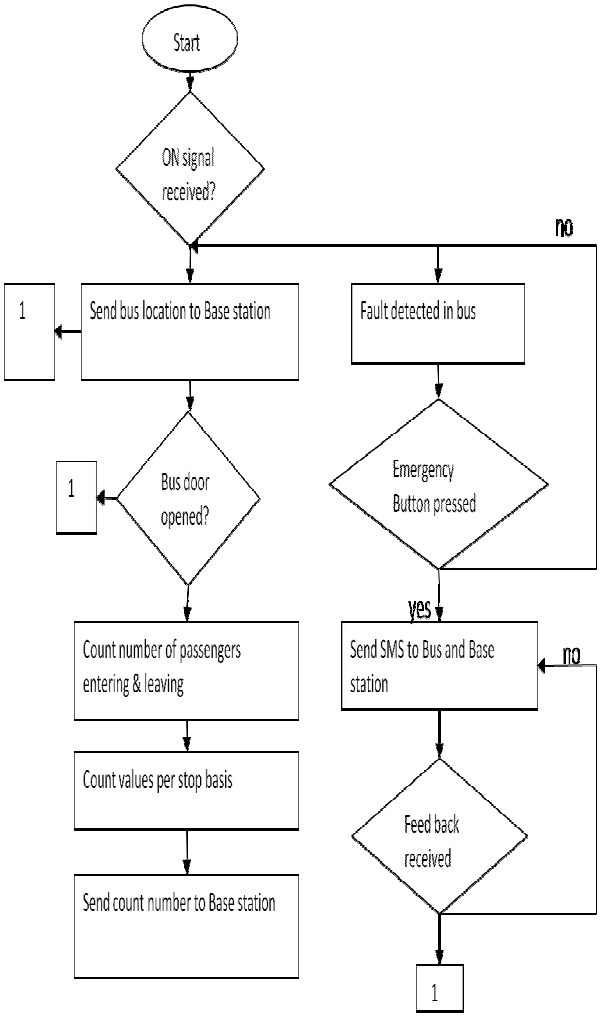

Fig . 6. Flow Chart for BUS Module

IV. CONCLUSION

In this paper the transport management, designed and developed a low cost system based on integration of GPS and GSM data is described. The system consists of different modules which are linked wirelessly with GSM modems. Cost effective SMS service of GSM network is used for the transfer of data between the modules. A new service, to facilitate the people who use public transport for traveling, is introduced inside the cities. The service provides the user with current location information of desired buses based on which the user can adjust his schedule accordingly. The service therefore completely minimizes the need of waiting for buses in the bus stop thus saving a lot of time. For the passengers those who are not utilizing the service, displays are installed at bus stop to let them know the buses location coming towards that stop. This system is also efficient in handling the emergency situations e.g., in case some kind of technical

fault occurred in bus, the operator at bus terminal is informed and the departure time between the buses is reduced.

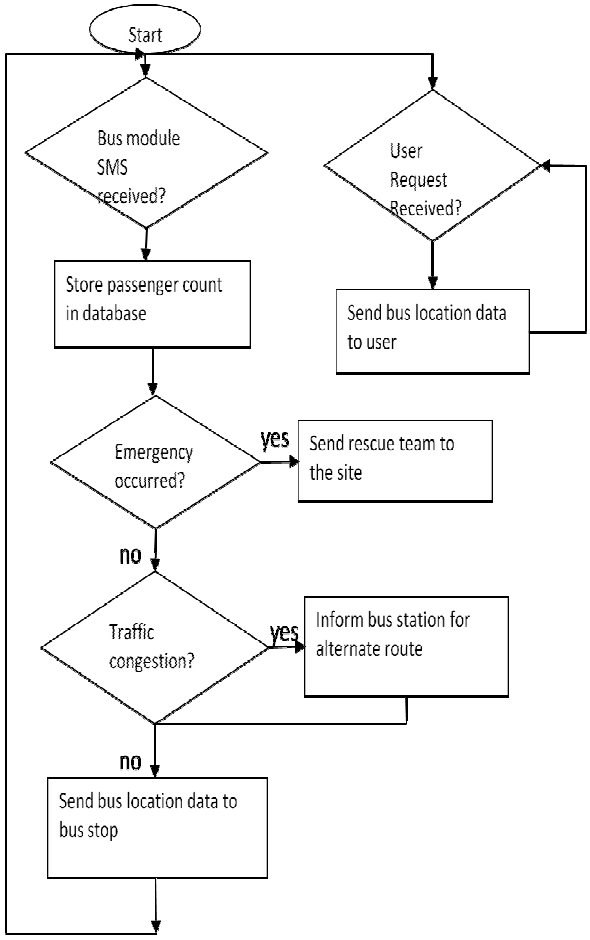

Fig.7. Flow Chart for Base station Module

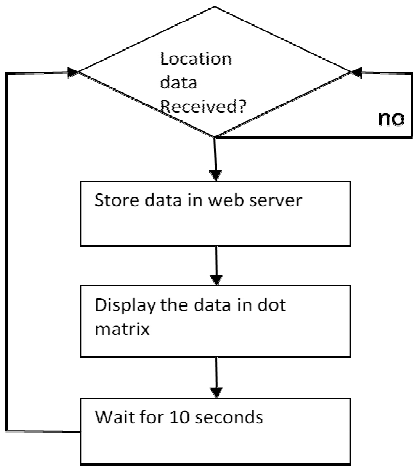

Fig.8. Flow chart for future scope

V. FUTURE WORK

The system can be made automatic by installing cameras at bus terminals which can automatically read the license plate number of buses thereby eliminating the operator. An automatic route guider display can be installed in buses to better update the alternative route in case of serious road congestions. The data can be stored in a web server. It can accept location information of buses through respective GSM modems and maps the information on Google Map for visualization. Fare collecting system can also be automated by providing another mobile service to which all the passengers using public transport are subscribed.

VI. REFERENCES

[1]Umar Farooq, [2]Tanveer ul Haq *Senior Member IEEE* GPS-GSM Integration for Enhancing Public Transportation Management Services, 2010 Second International Conference on Computer Engineering and Applications

[2] P & D Department Punjab and Dainichi Consultants Inc., "Urban transport policy study for five cities of Punjab Provinc," Nov 2008.

[3] Muhammad Imran and Nicholas Low, "Time to change old paradigm: Promoting sustainable urban transport in Lahore Pakistan," International Journal of World Transport Policy and Parctice, vol. 9, pp. 32-39, Nov 2003.

[4] Muhammad Imran and Nicholas Low, "Impact of global institutions on urban transport in Pakistan cities," Proc. 39th ISoCaRP Congress, 2003.

[5] Available [online]: www.garmin.com/products/gps35

[6] Available [online]: www.d-d-s.nl/fotos-nokia/n12i_datasheet_a4_v2.pdf

[7] Available [online]: www.alldatasheet.com

[8] M. A. Mazidi, J. C. Mazidi, R. D. Mckinaly, The 8051 Microcontroller and Embedded Systems, Pearson Education, 2006

[9] Available [online]: www.mathworks.com

AUTHORS

Mr. K.Bhaskar ,Completed his M. Tech in Embedded Systems and Completed his B.Tech (EEE) from Hyderabad. Completed his Diploma (EEE) fromWarangal. His Interested areas of Research include Embedded Systems, Digital Electronics and Hardware Design.

EMail ID: bhaskar.kunusoth@gmail.com

ISSN: 2321-8169
2695 – 2699

Automated Toll Plaza Using RFID and GSM

Tejonidhi Aphale[1], Rahul Chaudhari[2], Jinit Bansod[3]
[1,2,3]Department of Electronics and Telecommunication Engineering,
PVG's College of Engineering and Technology, Pune

Abstract— The aim of this research paper is to illustrate the convenience and versatility of an automatic toll plaza system using RFID technology and its advantages over toll plazas using other techniques. With the number of vehicles increasing every year, the time and fuel wasted on waiting at the toll plazas is ever increasing. Automatic toll plazas can eliminate this wastage of time, fuel and enhance the vehicle security by providing a host of other features such as sending a text message to the registered mobile number of the owner, displaying the information about the vehicle on the display in addition to automatic opening and closing of the barricade. The toll is deducted from the vehicle owner's prepaid account. A 125 KHz RFID reader is used for detecting the passive tags by the reader module. The motor for the barricade, on-site LCD display and GSM modules have been interfaced with the microcontroller (ATMega328). This system will cut down time and fuel wastage at the manually controlled toll plazas, provide a layer of security because the SMS sent and will ensure a smoother travel experience for the travelers.

Index Terms — ATMega328, GSM, LCD, RFID, Toll Plaza

*****

I. Introduction

The project mainly focuses on the Automation of the Toll Plazas for smoother movement of the traffic to in turn benefit the people by saving their time and money.

Suppose the manual toll collection system is very efficient, then Time taken by 1 vehicle at the plaza = 60 sec (approx.) Time taken by 1 vehicle/year = 60 X 365 = 21900 sec = 6 hoursSuppose 10000 vehicles are passing through a toll plaza 60000 fuel hours get wasted per year and thus equivalent amount of fuel. By making the toll plaza fully automatic using the RFID technology, the cars can pass through the plaza at around 55 mph i.e. 86 kmph. The time and fuel wastage can be drastically brought under control by this.

We here, are interfacing the RFID receiver to the microcontroller. The receiver is Active and the RFID tags are passive. The receiver will be fixed at the toll plaza constantly trying to search for the tag. As soon as the tag comes in the range of the receiver, the unique code from the tag is identified by the receiver and transmitted serially to the microcontroller.

The controller then matches the unique code to the Central Database and checks if the owner of the tag is in good standing with respect to the balance in his account. Stipulated price of the toll will be deducted from his account. Hence a complete cashless operation is made possible. Then an SMS will be sent to the owner using the GSM module about how much money has been debited from his account OR if there is insufficient balance. Moreover, the owner will be sent the information regarding the location of the toll plaza from where the vehicle has passed. In this way he will get a warning to maintain sufficient balance in his account and also be able to track his vehicle in case of theft. Also as he passes the portal he will be able to see his details on site on the LCD on site. Accordingly, if the toll is paid properly the gate will automatically open for him.

II. Literature Survey

In [1], the automation of toll plaza has been done based on image processing. ANPR (Automatic Number Plate Recognition) system has been employed which uses a camera to capture the number plate of the vehicle and deducts the toll by matching it with the owner database.

In [2], the system is based on infrared sensors. In this, the user has to get the IR transmitter from the main toll office. The transmitter will be charged by the store office and the data of the user will be stored in the microcontroller. When the car arrives at the toll plaza the user will have to mount the transmitter on the car and press a button to turn it on. It must be in the line of sight of the receiver. The receiver will confirm the data from the transmitter with the database and the amount of toll will get deducted. It uses a stepper motor for gate control.

In [3] also the system is based on the RFID technology. The controller used is PIC 18F4550 and has been connected with the system using USB. The RFID receiver senses the tag coming in its range and the amount gets deducted from the account of the owner after all the related information is checked from the database. The IR senses the vehicle motion for controlling the opening and closing of the gate. A stepper motor is used to control the gate.

The rest of the references mentioned below have also employed the RFID technology and the working is quite similar to [3] except the database creation methods. The authors have put the GSM interfacing in their future scopes which we have implemented in our project.

System Design And Implementation

ISSN: 2321-8169
2695 – 2699

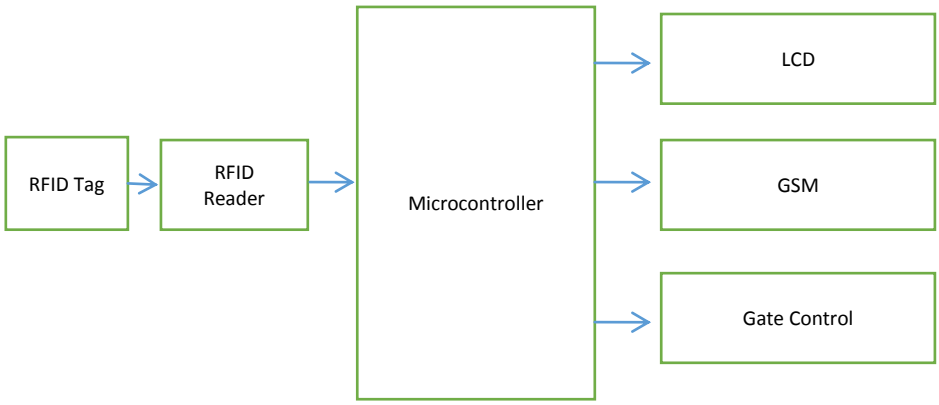

Figure 1: Block Diagram of the system

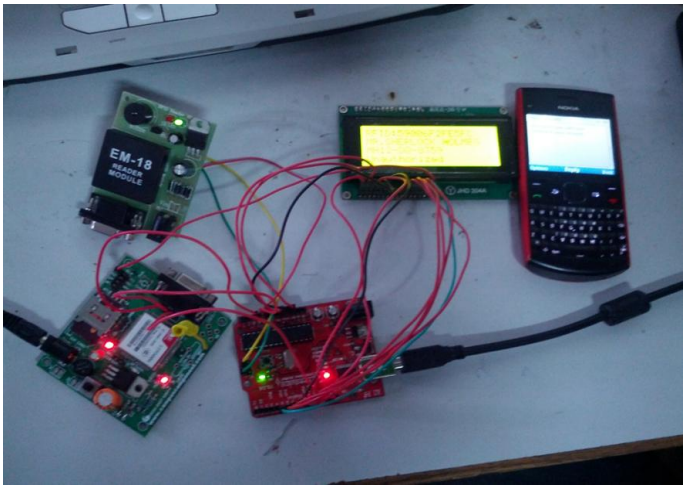

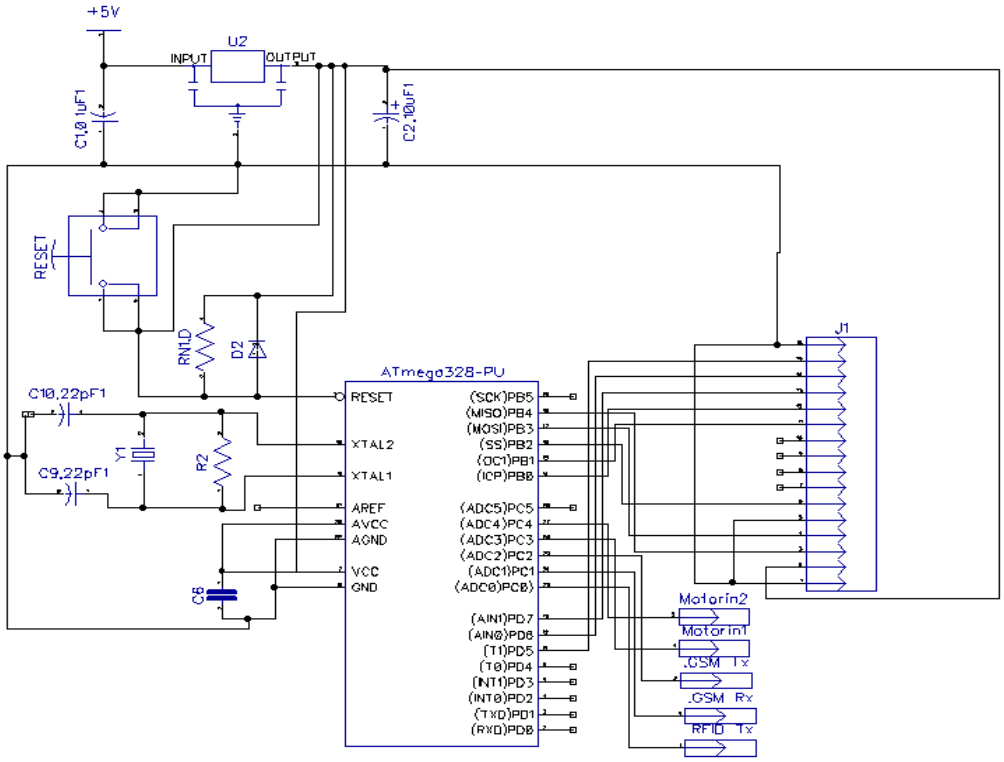

Figure 2: Circuit Diagram

ISSN: 2321-8169
2695 – 2699

The major components of the gate control system are as follows:

- ATMega328PU microcontroller
- EM-18 (RFID reader module)
- SIM900 (GSM module)
- DC Motor with driver(L293D)
- LCD display
- Power supply unit

1. **ATmega328-PU µC:**
   Features:
   28 Pin I/O
   RESET Pin NO. 1 (ACTIVE LOW)
   Crystal Pins at 9-10 PIN
   Software Declarable Serial Ports
   We have selected this controller because it has programmable UARTs required for both RFID and GSM modules.
2. **EM-18 (RFID reader module):**
   Features:
   Operating Distance – 10cm
   Operating Voltage – 5V
   Operating Frequency – 125 KHz
   Current Consumption - <50 mA
   This is the stationary Active RFID receiver module situated at the toll plaza. It continuously keeps monitoring for the RFID tags. As soon as the tag comes in the range of the receiver, the buzzer on the module gives an indicative beep and sends the data serially to the microcontroller.
3. **SIM900 (GSM module):**
   Features:
   - Quad-Band GSM/GPRS 850/ 900/ 1800/ 1900 MHz
   - Built in RS232 Level Converter MAX3232)
   - Configurable baud rate
   - SMA connector with GSM L Type Antenna.
   - Built in SIM Card holder.
   - Built in Network Status LED
   - Inbuilt Powerful TCP/IP protocol stack for internet data transfer over GPRS.
   - Normal operation temperature: -20 °C to +55 °C
   - Input Voltage: 5V-12V DC
4. **DC Motor with driver(L293D)**:
   L293D contains two inbuilt H-bridge driver circuits.
   In its common mode of operation, two DC motors can be driven simultaneously, both in forward and reverse direction.
   The L293D is a Dual Full Bridge driver that can drive up to 1 Amp per bridge with supply voltage up to 24V
   Two H bridges of L293D can be connected in parallel to increase its current capacity to 2 Amp.
   Motor drivers act as current amplifiers since they take a low-current control signal and provide a higher-current signal
   Input logic 00 or 11 will stop the corresponding motor. Logic 01 and 10 will rotate it in clockwise and anticlockwise directions, respectively.
   Technical Specification:
   Power Supply: Over FRC connector 5V DC
   External Power 9V to 24V DC
   Temperature Range: 0°C to +70 °C
5. **LCD display:**
   20X4 lines display
   5X7 dot matrix display
   4 bit data interface
6. **Power supply unit:**
   Specifications:
   12 V, 2A

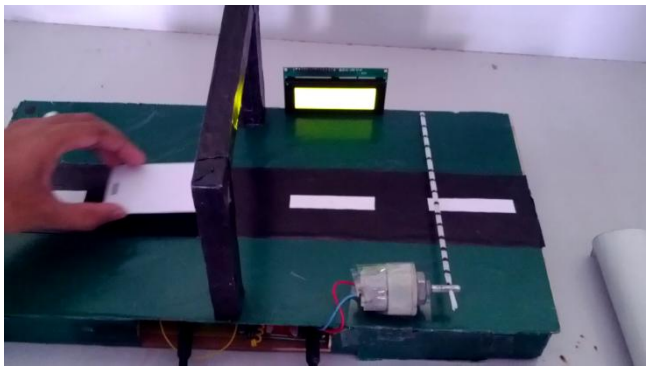

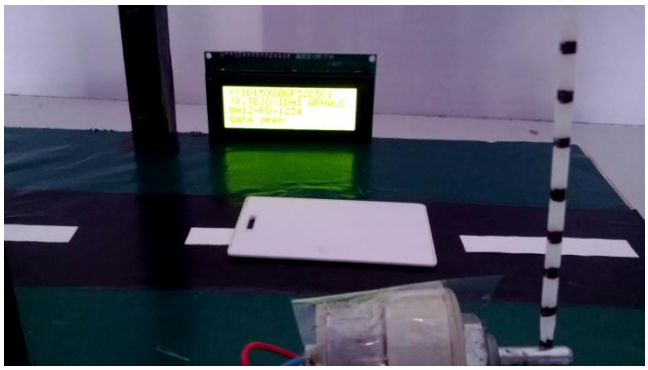

ISSN: 2321-8169
2695 – 2699

Flow Chart

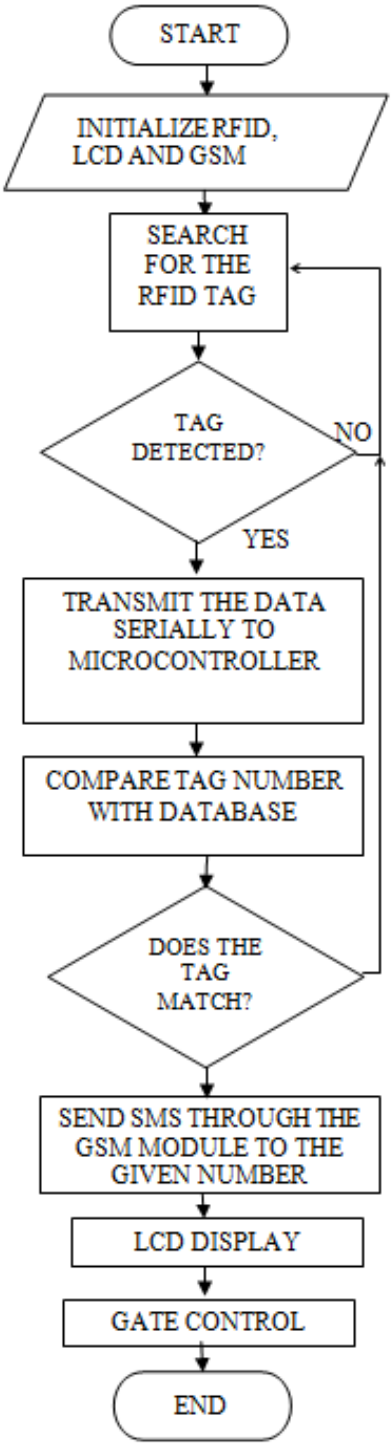

III. ADVANTAGES

- RFID system does not need Line Of Sight (LOS) unlike bar-codes or image processing based system. Thus it can be installed inside the car from where it is not visible, which saves tampering with the process in case of theft.
- As in [1], the cars need to be at a specified position for the system to scan the number plate which is not required in RFID based system. Also, the number plates can easily be exchanged which has no way to get detected.
- High speed passage of car is possible (55 mph or 86 kmph).
- Wastage of fuel is substantially reduced.
- Traffic jams are avoided to a great extent.
- Security is an added advantage - The location of a stolen car can be notified to the concerned owner through the GSM module.
- The owner will also be informed about the amount deducted and the remaining balance which will help him to maintain a sufficient balance in his account.

IV. CONCLUSION

We can reduce the prevalent problem of skipping the payment of toll at toll plazas because of automatic deduction and enhance the security of the vehicle due to GSM interfacing. The long queues at the toll plaza and need for human intervention is reduced greatly. This system will ensure a smoother and safer journey for the passengers.

V. FUTURE SCOPE

In addition to the current work, image processing can be combined with the RFID system to make the system more reliable and secure. By combining the positives of the two we can eliminate any possible discrepancies in the system. Internet banking as well as SMS banking can be used for recharging the account of the user to make it convenient.

REFERENCES

[1] Priyanka Chhoriya, "Image Processing Based Automatic Toll Booth in Indian Conditions"http://www.ijetae.com/files/Volume3Issue4/IJETA E_0413_71.pdf

[2] Shilpa Mahajan, "Microcontroller Based Automatic Toll Collection System" http://www.ripublication.com/irph/ijict_spl/09_ijict v3n8spl.pdf

[3] Aung Myint Win, "RFID Based Automated Toll Plaza System" http://www.ijsrp.org/research-paper-0614/ijsrp-p3009.pdf

[4] Khadijah Kamarulazizi "ELECTRONIC TOLL COLLECTION SYSTEM USING PASSIVE RFID" TECHNOLOGYhttp://www.jatit.org/volumes/research- papers/Vol22No2/1Vol22No2.pdf

[5] Sachin Bhosale, "AUTOMATED TOLLPLAZA SYSTEM USING RFID" http://ijsetr.org/wp content/uploads/2013/07/IJSETR-VOL-2-ISSUE-2-455-460.pdf

[6] Vinay Kumar Bachu, "RFID Based Toll Plaza" http://www.ijert.org/view.php?id=5567&title=rfid-based-toll-plaza

[7] Simple toll plaza system using low frequency RFID interfaced with 8051 microcontroller (AT89C51) http://www.engineersgarage.com/microcontroller/8051projects/simple-toll-plaza-rfid-interface-at89c51-circuit

GSM OR X10 BASED SCADA SYSTEM FOR INDUSTRIAL AUTOMATION

Smita Suresh Wale, S.B. Patil

ME (ETX) Student, Dr.J.J.Magdum College of Engineering, Jaysingpur, Dist.-Kolhapur, State- Maharashtra
smitawale@yahoo.co.in

Abstract

Power systems are important and expensive components in the electric power system. The knowledge of the actual status of the system insulation behavior, load tap changer performance, temperature, and load condition is necessary in order to evaluate the service performance concerning reliability, availability and safety. Systems abnormalities, loading, switching and ambient condition normally contribute towards accelerated aging and sudden failure. The paper presents the causes which lead to the internal faults appearance in the power system. The production mechanisms of the faults and the on-line monitoring are also analyzed. A monitoring procedure is proposed for the diagnosis and forecasting strategy of the functioning state of the power system.

Keywords: *GSM standard reference manual, Universal IC programmer*

----------***----------

1. INTRODUCTION

A Supervisory Control and Data Acquisition system has been developed with an auto fault detection capability.[1] The Programmable Logic Controller used in a standard Supervisory Control and Data Acquisition system has been eliminated by using a microcontroller, resulting in a lower cost. Signals derived from a large number of detectors and sensors can be processed simultaneously.[2][3] The design enables the system to check the alarm status, true or false i.e. normal, faulty sensor, or open circuit. The data acquisition circuit is interfaced with the microcontroller board to evaluate the current flow conditions, normal or abnormal. A program written in Visual Basic provides for a graphical layout of the plan of the plant or building to be displayed on the monitor with a clear indication of the alarm spot.[1] A Close Circuit Television camera is made to move automatically to capture the particular location of the triggered alarm at the same time of the alarm signal. The methodological framework for managing Supervisory Control and Data Acquisition systems with auto fault detection using microcontroller constitutes the major contribution of the this.[2]

The power-line communications has been applied as a data transfer method in mechanical system and indoor distribution networks.[3] The characteristics of power-line channels and the applicability of different digital modulation techniques have been widely researched. Fault detection in mechanical system is an important element for industrial growth & social development. For the last fifty years, electric power system has rapidly grown. This has resulted in large increase of the number of lines in operation & their total length. These lines experience faults which are caused by insulation breakdown & short circuits, sudden outage of line etc.[3][4]

The purpose of this project is to acquire to remote electrical parameters and send these real time values over Global System for Mobile Communication using Global System for Mobile Communication modem/phone.[1] The project is also design to protect the electrical circuitry by operating electromagnetic relay this relay gets activated whenever the electrical parameter exceed the predefined values, the relay can be used to operate the circuit breaker to switch off the main electrical supply.[2]

User can send commands in the form of SMS messages to read the remote electrical parameters. The system also can automatically send the real time electrical parameters periodically based on time setting in the form of SMS.[3] This also can be design to send SMS alerts whenever the circuit breakers trips or whenever the voltage and currents exceeds the predefined limits.[4]

2. ARCHITECTURE

Block Diagram

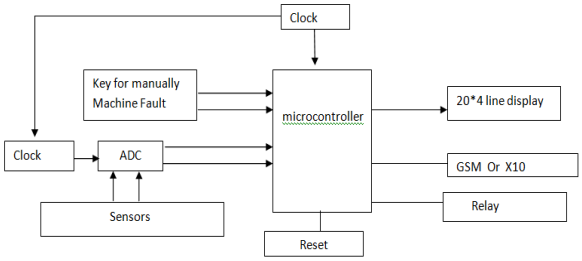

Fig 1 Transmitter

1] MCU: (microcontroller unit)

It is the heart of system. All the controlling functions, data transmitting function are done by this unit. Following functions will be carried out by microcontroller unit.

1. Check whether any key is active or not if active then inform the fault related with the key to monitoring station via sms or x10 protocol.
2. To read ADC & compare ADC data with set point & if result is above set point then send the SMS to server also operate relay

2] GSM module:-

GSM SIM 300 is used as a media for communication between machine or user & server. Server will be informed about fault via SMS. AT commands will be used.

3] X10 Module:-

It is used to send the data via a available power lines. It is plc for power line communication.

4] Sensors:

- Vibration sensor:-
  Used to detect any vibration of machine
- CT sensor:-
  To sense the current consumption
- Temperature sensor:-
  To check the temperature of machine

5] Power supply requirement:

Power supply required is 12v dc/2A max. For all system.

6] LCD:

20*4 line LCD is used to monitor the conditions of vehicle.

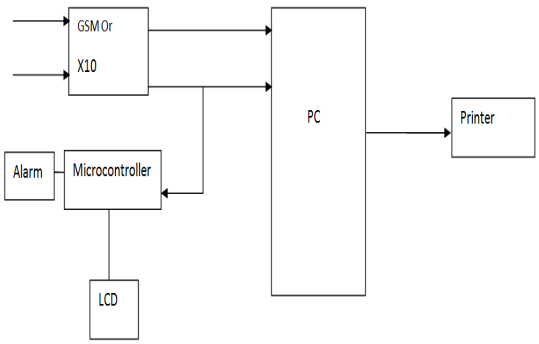

Fig 2 Receiver

Monitoring side:

1. At this side we will receive the information of different faults via SMS or x10 protocol.
2. This data is given to PC through gsm modem or x10 protocol via a max232 converted to PC
3. Pc will record the fault, fault time & fault duration & it will give the signal to trigger alarm to microcontroller. Record will be printed on user command.

This section describes the common features of the SCADA products that have been evaluated at CERN in view of their possible application to the control systems of the LHC detectors [1], [2].

2.1 Hardware Architecture

One distinguishes two basic layers in a SCADA system: the "client layer" which caters for the man machine interaction and the "data server layer" which handles most of the process data control activities. The data servers communicate with devices in the field through process controllers. Process controllers, e.g. PLCs, are connected to the data servers either directly or via networks or field buses that are proprietary (e.g. Siemens H1), or non-proprietary (e.g. Profile bus). Data servers are connected to each other and to client stations via an Ethernet LAN. The data servers and client stations are NT platforms but for many products the client stations may also be W95 machines. Fig.1 shows typical hardware architecture evolution as well as the potential benefits of their use.

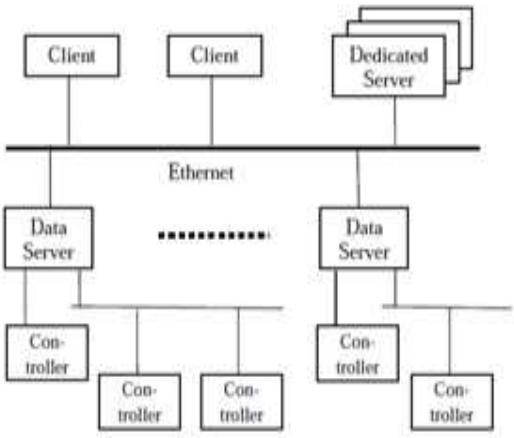

Fig 3.Typical hardware architecture

2.2 Software Architecture

The products are multi-tasking and are based upon a real-time database (RTDB) located in one or more servers. Servers are responsible for data acquisition and handling (e.g. polling controllers, alarm checking, calculations, logging and archiving) on a set of parameters, typically those they are connected to.

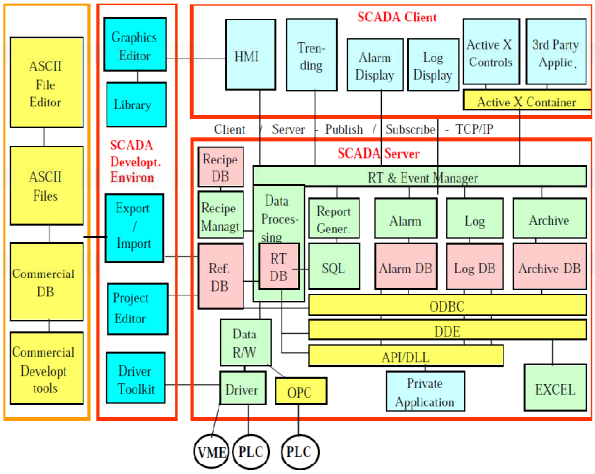

Figure 2: Generic Software Architecture

3. GSM TECHNOLOGY

One of the most important conclusions from the early tests of the new GSM technology was that the new standard should employ Time Division Multiple Access (TDMA) technology. This ensured the support of major corporate players like Nokia, Ericsson and Siemens, and the flexibility of having access to a broad range of suppliers and the potential to get product faster into the marketplace. After a series of tests, the GSM digital standard was proven to work in 1988.

With global coverage goals in mind, being compatible with GSM from day one is a prerequisite for any new system that would add functionality to GSM. As with other 2G systems, GSM handles voice efficiently, but the support for data and Internet applications is limited. A data connection is established in just the same way as for a regular voice call; the user dials in and a circuit-switched connection continues during the entire session. If the user disconnects and wants to re-connect, the dial-in sequence has to be repeated. This issue, coupled with the limitation that users are billed for the time that they are connected, creates a need for packet data for GSM.

The digital nature of GSM allows the transmission of data (both synchronous and asynchronous) to or from ISDN terminals, although the most basic service support by GSM is telephony.17 Speech, which is inherently analog, has to be digitized. The method employed by ISDN, and by current telephone systems for multiplexing voice lines over high-speed trunks and optical fiber lines, is Pulse Coded Modulation (PCM). From the start, planners of GSM wanted to ensure ISDN compatibility in services offered, although the attainment of the standard ISDN bit rate of 64 Kbit/s was difficult to achieve, thereby belying some of the limitations of a radio link. The 64 Kbit/s signal, although simple to implement, contains significant redundancy.

GSM is a typical 2G system in that it handles voice efficiently, but provides limited support for data and Internet applications. Operators frequently point to GSM penetration levels of more than 50% in order to justify required investments in 3G licenses, network construction, and services development.8 That the extent of the costs of deployment for 3G has rendered it a 'costly business' is a tremendous understatement. This project makes use of an onboard computer which is commonly termed as microcontroller; this on board computer can efficiently communicate with the different sensors being used. The controller is provided with some internal memory to hold the code. This memory is used to dump some set of assembly instructions into the controller and the functioning of controller is dependent on these assembly instructions.

The project provides us exposure on

1) Initialization of ADC module of microcontroller
2) Embedded C program
3) PCB designing
4) Different electrical sensors
5) Interfacing sensors to controller
6) LCD interfacing

The scope of this work is to research the applicability of power-line communications for industrial application data transfer required by the on-line condition monitoring system of mechanical system. Typically, energy consumed by consumer data transfer is performed between the controlling unit and simple devices, such as measuring devices or servers. The protocols used for data transfer are simple when they are compared to standard field bus protocols. The main objective of this work is: Measuring, the units consumed by power system through Power line communication.

The channel used for data transfer is low voltage distribution network. The topology of the network is dependent on the type and scale of the plant. Thus, the characteristics of the environment are also dependent on the type and scale of the plant.

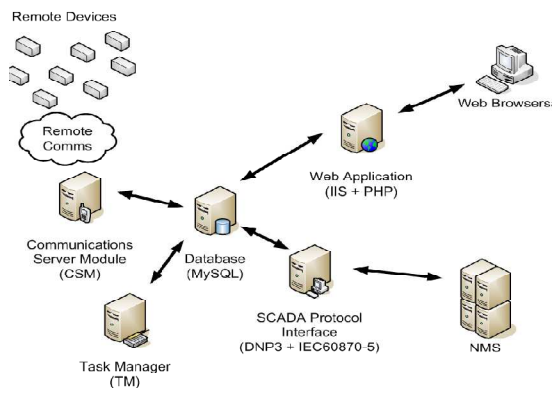

Fig 4

CONCLUSIONS

This dissertation work covers practical applications and fault detection & protection of power system & keeps data record in data base to save time, money. To improve the performance and reduce the cost of a Supervisory Control and Data Acquisition system. To study and design a system that enables the status of the sensor to be detected. To improve the intelligence of the system by introducing auto fault diagnosis checking intervals can be preprogrammed to be every few seconds or minutes, to detect the change in sensor's state. To spot the particular alarm area by the camera and display the scene instantly on the computer, together with a floor plan indicating the exact location. This system makes use of microcontroller. It can efficiently communicate with the different sensors being used. The controller is provided with some internal memory to hold the code. This memory is used to dump some set of assembly instructions into the controller and the functioning of controller is dependent on these assembly instructions.

RESULTS

Faults like change in temperature, pressure and voltage will be detected by the sensors. The fault detection message will be sent to the control in charge's mobile phone or to control room. Also the current status of the parameter will be displayed on the LCD in real time.

REFERENCES

[1]. A Scada System Using Mobile Agents For A Next-Generation Distribution SystemTetsuo Otani, Member, IEEE, And Hiromu Kobayashi, Member, Ieee Transactions On Power Delivery, Vol. 28, No. 1, January 2013

[2]. Sensor Network Based Oilwell Health Monitoring and Intelligent Control Donglin Wang, Member, IEEE, Renlun He, Jiangqiu Han, Michel Fattouche, and Fadhel M. Ghannouchi, Fellow, IEEE sensors journal, vol. 12, no. 5, may 2012

[3]. Current Sensor Fault Detection, Isolation, And Reconfiguration For Doubly Fed Induction Generators Kai Rothenhagen, Member, IEEE, And Friedrich Wilhelm Fuchs, Senior Member, IEEE Transactions On Industrial Electronics, Vol. 56, No. 10, October 2009

[4]. Microcontroller Based Fault Detection Using Redundant Sensors Hector P. Polenta, Asok Ray, Sensor Member, And John A. Bernard, Sensor Member, IEEE Transactions On Industry Applications, Vol. 24. No.5.September/October 1988

BIOGRAPHIES

Miss. Smita Suresh wale, ME (ETX) Student, Dr.J.J.Magdum College of Engineering, Jaysingpur, Dist.-Kolhapur, State- Maharashtra
smitawale@yahoo.co.in

ISSN(Online): 2319-8753
ISSN (Print): 2347-6710

International Journal of Innovative Research in Science, Engineering and Technology

(An ISO 3297: 2007 Certified Organization)

Vol. 4, Issue 6, June 2015

Automatic Voice Responding System for Parents of Students

Jagruti Patil [1], Jyoti Borole [2]

P.G. Student, Department of Electronics & Tele-Communication Engineering, GF's GCOE, Jalgaon, India[1]

Associate Professor, Department of Electronics & Tele-Communication Engineering, GF's GCOE, Jalgaon, India [2]

ABSTRACT: Now-a-days every institute needs automation. AVR system is an automated commincation system allowing user to interact with a computer to achieve the defined result without using human interface. The user can get the information at anytime from anywhere by dialling the specified mobile number. The AVR system uses computer stored data. The student data is stored in computer. The parents mobile number is stored in the computer. When a parents dial the specified mobile number, they will get the student percentage attendance in voice form. Hence parents can get the student performance report from anywhere at any time. For implementing this system we are using ARM 11 microcontroller Raspberry Pi and GSM module.

KEYWORDS: AVRS: Automatic Voice Responding System, Raspberry Pi.

I. INTRODUCTION

In today's fast life parents do not have time to visit the college for visiting professor to know the student performance. It is difficult for parents to visit the college daily to get the daily attendance of student. Also some colleges provide user name and password to the parents to see their student performance. But this system also requires internet facility. Hence the automatic voice responding system is used. This system uses the student data stored in computer and parents number register in the computer. Student's data like roll number, name, branch, year and overall percentage attendance is stored in college database. Also parent's mobile number is registered to the college database. When the parents call from the registered mobile number to the specified college number, the parents will get the student overall attendance in percentage in voice form.

The system is especially proposed for college automation. The system is based on ARM 11 microcontroller ie Raspberry Pi and GSM module. GSM is most widely used among the digital wireless telephony technologies. The GSM module equipment has a Subscriber Identity Module (SIM) security and authentication. The SIM is a data base smart card containing the user's subscription information and phone book. The advantage of the GSM is its international roaming capability in over 100 countries, improved battery life, efficient use of spectrum, advance features such as short meassaging and caller ID, a wide variety of handset and accessories, high stability mobile fax and data upto 9600 baud.

The goal of our system is to easily get the student performance in college weather their child is attending lectures properly or not. And by using this system parents can easily get the student attendance from anywhwere at anytime without human interface.

II. RELATED WORK

In 2006, Aysha Qaiser and Shoab A Khan implements the automation of time and attendance using RFID systems[1]. Student and faculty are provided with RFID tags. The system is capable of marking attending, marking unauthorized entry, submission of warning via E-mails, SMS to keep them updated about their child's progress in institute, a dedicated website for availability of the processed data for user. Whenever a warning is submitted at student

ISSN(Online): 2319-8753
ISSN (Print): 2347-6710

International Journal of Innovative Research in Science, Engineering and Technology

(An ISO 3297: 2007 Certified Organization)

Vol. 4, Issue 6, June 2015

account in case of on-probation or in case of low weight age, an e-mail containing the same warning is send to the parent or an SMS is sent to parents. Also if parent wish to see the student performance, parents has to visit the dedicated website with login in to the system.

Sameeh Ullah and Fakhri Karray in 2008, describes a speaker independent accent based natural language call routing system[2]. This system directs the customer calls to the automatic speech recognition system that is suitable to recognize the input query. Accent identification is is required for improving the performance of the natural language call routing system. For this clustering algorithm is used in which a distance metric learning approach, data points are transferred to a new space where Euclidean distance between similar and dissimilar points are at their minimum and maximum respectively. Hybrid clustering approaches improve the performance of the accent classification module in IVR systems.

In 2009[3], Chang-Xing QI, Qing-Dong Du represented a smart IVR system based on application gateway. A IVR system that brings the interactive information by application gateways that communicate between the call center and business information system. This system is based on the function of traditional call center. The application gateway and the IVR system and the information system background resolve the question of format conversation among the various systems in company.

Chang-Xing Qi, Jie Liu, Hang Li in 2010, describes the statistical regression algorithm. In this on the number of node visited it generates the dynamic menu of the IVR[4]. The voice files of data demanded are built and played for response through application gateway, TTS and IVR system together. To improve the service and market capacity, modern enterprises are using call center. As a part of call center, the IVR system can bring customers data voices and relevant information by pressing the keys on the normal telephones and entering the required request information. By entering the required information, the IVR will visit the resource of the call center and retrieve the required data information and send the query result to the IVR system and build the voice files by TTS. And this is played to the customer through telephone or sends a text files by fax.

Mudili Soujanya and Sarun Kumar developed the personalized IVR system in contact center in 2010[5]. To develop this speech application software development toolkit used to provide an efficient speech interface, asp.net to supply the requested information to the Microsoft server and interact with the database to process the request of the customer. This is used to provide the service to the customer in accost effective manner without discarding the customer. There are two types of IVR system used touch tone and speech enabled. Touch tone IVR provide the service by having callers select from a list of options using touch tone keypad and speech enable IVR system provide service by having caller select from a list of option by speaking an option or by speaking a keyword.

In 2010, Shanchuan Xu, Wanlin Gao, Zhen Li, Shuliang Zhang, Jianing Zhao proposes a hierarchical system of reusable IVR[6], which reduces the dependence between models and uses XML files as configuration file to make the IVR easily change by modifying the XML file. The new IVR system design which makes IVR system independent from requirements and become a reusable, configurable system as a module of call center.

ISSN(Online): 2319-8753
ISSN (Print): 2347-6710

International Journal of Innovative Research in Science, Engineering and Technology

(An ISO 3297: 2007 Certified Organization)

Vol. 4, Issue 6, June 2015

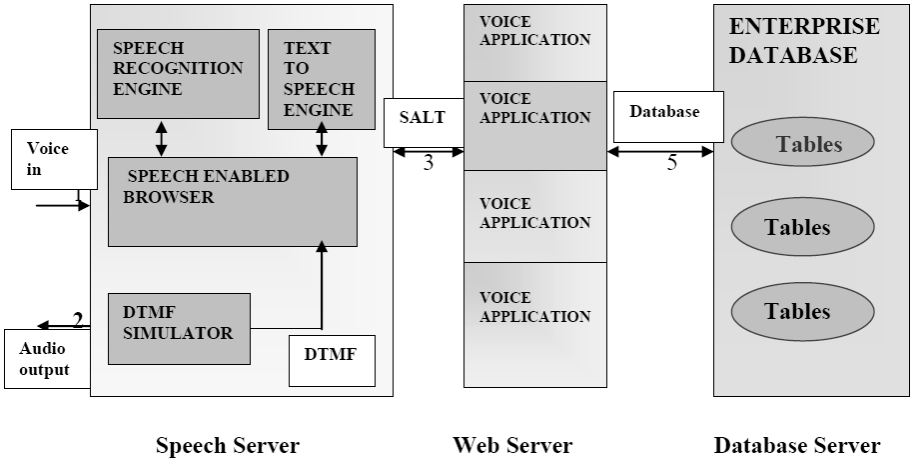

Fig No. 1 Architecture of personalized IVR system

Comparison of touch and speech-enabled IVR system in low literacy user[7]given by T. jama Ndwe, Mqhele Dlodlo, Jeffery Nichols in 2010 address the feasibility of using the telephone as a tool for information access in the technology challenged and illiterate communities of south Africa. An IVR system is designed for delivering care giving health information using a telephone. This used a DTMF and speech enabled IVR system.

In 2012, Seema Mishra, Apeksha Chavan and Swapnil Gourkar proposed a interactive voice responding system for educational institute[8]. This system uses the pre-recorded information or computer generated voice response to provide information in response to an caller. The input may be given by touch tone or by the dual tone multi frequency signal.

In 2012[9], Santosh Kulkarni and A.R. Karwankar designed a IVRS for college automation which uses the DTMF signal which generates when a caller presses a key of telephone set. This system uses the geortzel algorithm. When a caller dials the number then the technique used for identifying frequency components of a signal is goertzel algorithm. It is digital signal processing technique for identifying frequency component of a signal.

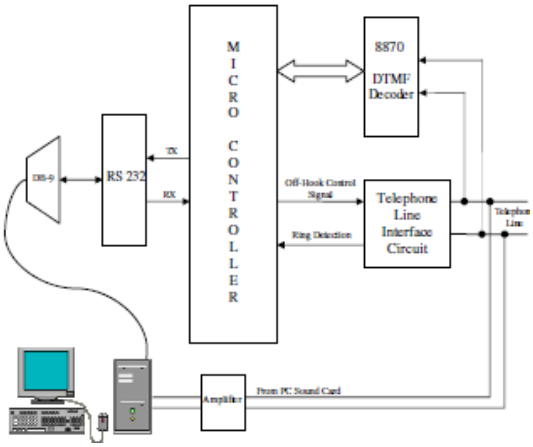

Fig No. 2 System diagram for college automation

ISSN(Online): 2319-8753
ISSN (Print): 2347-6710

International Journal of Innovative Research in Science, Engineering and Technology

(An ISO 3297: 2007 Certified Organization)

Vol. 4, Issue 6, June 2015

Dusan D. Grujic, Aleksandar R. Milic, Jovana V. Dadic proposed application of IVRS in e-learning system in 2012[10]. In this an interactive voice response solution is used within system for e-education. One of the methods used is open source system for learning the process management is modular object oriented development learning environment. And the system is IVR e-learning which is based on voice synthesis. A speech synthesis means artificial generation of human voice. A computer system used for this purpose is called voice synthesizer and it can be implemented in a suitable hardware or software.

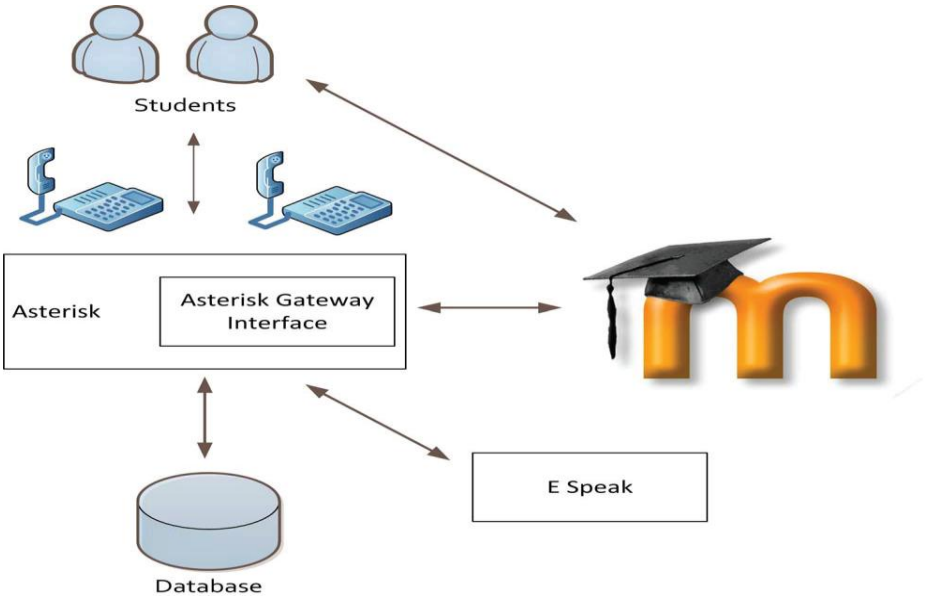

Fig No. 3 Infrastructure of an IVR system for e-learning

In 2012, A comprehensive study of design, development and implementation of an automated IVR systems[11] is proposed by Mr. Ritesh Chauhan, Mr. Vivek Joshi. This system serves the bridge between people and computer by connecting the telephone network with instructions. The IVR uses the pre-recorded or computer generated voice response to provide information in response to an input from the telephone caller. The input may be in terms of touch tone or DTMF signal, which is generated when a caller press a key on telephone.

T.J. Ndwe, Etienne Barnard describes that the access to information and communication is one of the most important need in any population group in 2013 in correlation between rapid learn ability and user preference in IVR systems for developing regions[12]. This retrains to those who are either poor or illiterate or without having knowledge of computer. Hence the user choice of interaction modality between dual tone multi frequency and speech enabled IVR modalities and correlated the results with learn ability of the different modalities.

III. CONCLUSION

In this paper, we have reviewed different voice responding techniques in various fields. Every system has its own importance. According to the above literature survey, we are using automatic voice responding system in educational institute. We are going to implement AVR system for parents of students by using the Raspberry Pi and GSM module. AVRS for parents of student is used in educational institute to inform the student performance in institute to the parents without visiting the college and without human interaction. By using this system it is convenient to get the student details easily to anyone and at any time. By using the Raspberry Pi, there is scope to optimize different methodologies in college automation to make system more users friendly and wide application areas.

ISSN(Online): 2319-8753
ISSN (Print): 2347-6710

International Journal of Innovative Research in Science, Engineering and Technology

(An ISO 3297: 2007 Certified Organization)

Vol. 4, Issue 6, June 2015

REFERENCES

1. Aysha Qaiser and Shoab A Khan, "Automation of time and attendance using RFID systems" IEEE-ICET 2nd international conference on emerging technology, 2006.
2. Sameeh Ullah and Fakhri Karray, "An evolutionary approach for accent classification in IVR systems" IEEE international conference on systems, man and cybernetics in 2008.
3. Hang-Xing QI, Qing-Dong Du, "An smart IVR system based on application gateways" ninth international conference on hybrid intelligent systems , 2009.
4. Chang-Xing Qi, Jie Liu, HangLi, "Application research of statistical regression algorithm in the IVR system" international conference on educational and network technology 2010.
5. Mudili Soujanya, Sarun Kumar,"personalized IVR system in contact center" internal conference on electronics and information technology, 2010.
6. ShanchuanXu, Wanlin Gao, Zhen Li, Shuliang Zhang, Jianing Zhao, "Design of hierarchical and configurable IVR system" 2nd intern. conference on computational intelligent and natural computing 2010.
7. T. jama Ndwe, Mqhele Dlodlo, Jeffery Nichols, "Comparison of touch and speech-enabled IVR systems in low literacy users" international conference on user science engineering 2010.
8. Ms Seema P Mishra, Ms Apeksha S. Chavan, Swapnil S. Gourkar, "Interactive voice response system for educational institution" international journal of advanced emgineering technology, April 2012.
9. Santosh A. Kulkarni, Dr. A.R. karwankar, "IVRS for college automation" international journal of advanced research in computer and communication engineering vol. 1, issue 6, August 2012.
10. Dusan D. Grujic, Aleksandar R. Milic, Jovana V. Dadic, Marijana S. Despotovic-Zrakic, "Application of IVR in e- learning system"20thtelecommunication forum TELFOR 2012.
11. MR. Ritesh Chauhan, Mr. Vivek Joshi, Prof. Aanchal Jain, "Acomprehensive study of design, development and implementation of an automated IVR systems" international journal of computer science and information technology and security vol. 2, no. 6, December 2012.
12. T.J.Ndwe, Etienne Barnard, Thato Foko, "Correlation between rapid learnability and user preference in IVR systems for developing regions" internal information management corporation, 2013.

ISSN (Online) 2321-2004
ISSN (Print) 2321-5526

INTERNATIONAL JOURNAL OF INNOVATIVE RESEARCH IN ELECTRICAL, ELECTRONICS, INSTRUMENTATION AND CONTROL ENGINEERING
Vol. 3, Issue 5, May 2015

THREE PHASE MOTOR CONTROL USING GSM

Prof. R.R Jadhav[1], Prathmesh P Pandit[2], Shubham D. Pal[3], Vineet H. Risbud[4]

M.Tech (E&TC), Assistant Professor (ETRX Department), COE Manjari (Bk), Pune, India[1]

BE, ETRX Department, COEM, Pune, India[2,3,4]

Abstract: This paper provides development of mobile phones as remote control application for the induction motor-pump which is used in the agriculture. Due to frequent power cuts and abnormal voltage conditions in India, it is necessary to distribute water efficiently to the fields during normal conditions. This is carried out by exchanging the information between the user phone and GSM in the form of messages. This system is developed with AT89C51 Microcontroller which in connected to the GSM and the motor. The microcontroller includes the protection against over-current, dry running and single phasing. It is expected that this application provides easy access of motor to a great extent.

Keywords: AT89C51 Microcontroller, GSM– Global System for Mobile communication, Mobile, SMS– Short Message Service.

I. INTRODUCTION

India is basically an agricultural country, and all its resources depend on the agricultural output. With the rapid development of agriculture in India, many automatic technologies have been introduced into agricultural productions. The total rainfall in a particular area may be either insufficient, or ill-timed. In order to get the maximum yield, it is essential to supply the optimum quantity of water, and maintain correct timing of water. This is possible only through a systematic irrigation system-by collecting water during the periods of excess rainfall and releasing it to the crop as and when it is needed. Irrigation is the science of planning and designing an efficient, low-cost, economic irrigation system tailored to fit natural conditions. By the construction of proper distribution system, the yield of crop may be increased because of controlled water supply.

II. METHODOLOGY

A. GSM BASED MOTOR CONTROL

The aim of this paper is to develop a cost effective solution that will provide remote control of induction motors through mobile phones using messages. The mobile user in the world has a tremendous rise during the past few years.

Remote monitoring of processes, machines, etc., is popular due to advances in technology and reduction in hardware cost. Cellular networks provide Short Messaging Service (SMS) approach offers simple interface with only destination cell phone address and message requirement without any header / protocol overhead.

B. SYSTEM DESCIPTION

In this project we can switch On & Off 3-Phase motor pump through mobile by using GSM. For this purpose we will use 3 Phase supply, Micro-controller IC, LCD Display, Max 232, GSM Module, Current Amplifier, Relay& 3 Phase Pump.

Above Block Diagram shows if 3 Phase supply is Ok GSM will give message to mobile & mobile will display message “3Phase is Ok”.

If we send message “Pump On” to GSM Module through mobile, relay circuit will switch In the pump with the help of Current Amplifier. Pump is working on 3 Phase power supply so out of 3 phase if any phase is braked, pump will immediately off & GSM will inform status of 3 Phase supply to the mobile. Then mobile will display message “Pump Off”.

C. CELL PHONE BASED SYSTEM

The GSM modem communicates with the user cell phone to intimate the condition obtained for the microcontroller. Serial Port Adapter works in data and AT modes and needs to be properly configured.

During power-on condition, LCD is initially in data mode and by sending characters, the device is moved into AT mode for configuration. In AT mode, series of commands are sent for proper configuration. If match is found, it starts data communication between micro-controller system and GSM. AT commands are sent by sending text strings along with specified command strings through serial port to cell phone and are executed on receipt of carriage return.

SMS Approach: SMS is store and forward way of transmitting messages between cell phones. The major advantage of using SMS is provision of intimation to the sender when SMS is delivered at the destination and ability of SMSC to continue efforts for delivery of message for the specified validity period if network is presently busy.

The text message is sent to cell phone using CMGS command.

ISSN (Online) 2321-2004
ISSN (Print) 2321-5526
INTERNATIONAL JOURNAL OF INNOVATIVE RESEARCH IN ELECTRICAL, ELECTRONICS, INSTRUMENTATION AND CONTROL ENGINEERING
Vol. 3, Issue 5, May 2015

D. MICROCONTROLLER SYSTEM

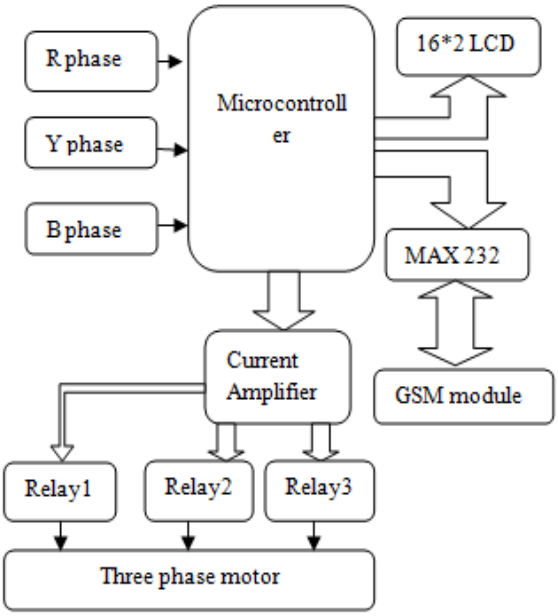

Fig.1 Block Diagram

The microcontroller provides the following standard features: 8K bytes of Flash, 256 bytes of RAM, 32 I/O lines, Watchdog timer, two data pointers, three 16-bit timer/counters, a six-vector two-level interrupt architecture, a full duplex serial port, on-chip oscillator, and clock circuitry.

The MAX232 which converts the 12V DC into 5V Dc and vice versa. The transmitter and Receiver of the Controller are connected to the 11th and 12 th pin of MAX232.

The block diagram of the system is shown in the Fig.1. The missed calls are received from the user mobile to perform specific task. Based on the received signals and sensor conditions, the signals are sent to the microcontroller to switch on/off the motor through the starter using the relays. The relay is controlled by the ports.

III. CONCLUSION

Thus the developed system enhances the water distribution in the field optimally. The system ensures protection of motor against overloads, overheating and phase imbalances.

It also provides automated restarting if normal conditions are re-established. Uniform distribution of water at regular intervals, reduction in labour cost, prevention of unwanted water spillage, minimization of occurrences of motor faults and intimation to user about the completion of task are the major advantage of this system.

The use of mobile phone has become more common among the farmers and hence used. The system proves to be great boon to farmers whose pump sets are located far away from their homes due to capability of remote control using cell phone and intimation about any abnormal conditions.

REFERENCES

[1]. Real-time automation of agricultural environment for modernization of Indian agricultural system. 2010 International Journal of Computer Applications (0975 - 8887) Volume 1 – No. 22.

[2]. Vasif Ahmed and Siddharth A. Ladhake, “Innovative Cost Effective Approach for Cell Phone based Remote Controlled Embedded System for Irrigation,” Intl. Conf. On Communication Systems and Network Technologies, 2011, pp 419-422.

[3]. Vasif Ahmed and S. A. Ladhake, "Design of Ultra Low Cost Cell Phone Based Embedded System for Irrigation," Intl. Conf. on Machine Vision and Human-machine Interface, Kaifeng, China, 24-25th April 2010, pp 718-721.

[4]. N. P. Jawarkar, Vasif Ahmed and R. D. Thakare, "Remote Control using Mobile through Spoken Commands," Proc. IEEE-ICSCN 2007, MIT Campus, Anna University, Chennai, Feb 22-24, 2007, pp 622-625

Volume 4, Issue 4, April 2014 ISSN: 2277 128X

International Journal of Advanced Research in Computer Science and Software Engineering

Research Paper

Available online at: www.ijarcsse.com

Implementation of Unmanned Vehicle using GSM Network with Arduino

Amey Kelkar

Department of Information Technology

Mulund College of Commerce, University of Mumbai, India

Abstract— A wide variety of applications in the present age need the use of robots as opposed to humans. Robots can perform tasks which are hazardous for humans or inaccessible to them. The basic idea of this system is based on the problems that are related to the above fact. Designing an unmanned vehicle that can be controlled via remote device and move in places where humans might not be able to reach shall solve many problems of applications such as spying, surveillance, search and rescue and also in the domain of science and research. By making use of rapid growing technology in robotics and automation, a robot which can be controlled by a cellular phone equipped with GSM network, which acts as a wireless communication link between the robot and the cellular phone, has been designed.

Keywords— Unmanned Vehicle, Robot, GSM, Arduino, DTMF Decoder

I. INTRODUCTION

A robot is a software controlled mechanical device that uses sensors to guide one or more end-effectors through programmed motions in a work space in order to manipulate physical objects. Robotics is the study of robots defined as the combination of machine tool technology and computer science and is a form of Industrial Automation and is a technology with a future and for the future. It is a branch of technology that deals with the design, construction, operation and application of robots and computer systems for their control, sensory feedback and information processing. [1,2] It is a rapidly growing field, as we continue to research, design and build new robots that serve various practical purposes, whether domestically, commercially or militarily

Sir Issac Asimov, the father of robotics, coined three laws of robotics which are as follows:

1. A robot may not injure a human being or, through inactions, not allow a human being to come to harm.
2. A robot must obey the orders given by human beings, except when such orders would conflict with the first law.
3. A robot must protect its own existence, as long as such protection does not conflict with the first or the second law.

II. OBJECTIVE

Wi-Fi controlled devices make use of radio frequency as a medium to transmit data and control the device remotely. The Wi-Fi transmitter which is often a handheld device transmits signals to the device. The Wi-Fi receiver, an antenna, which is mounted on the device receives the signals sent by the Wi-Fi transmitter which instructs the devices for manoeuvres and other functions. However, Wi-Fi network has a limited range. A typical Wi-Fi 802.11 b/g/n/ac network has a range varying from 35 meters to several hundred meters with line of sight. The range further deteriorates when there are obstacles like walls, trees etc. in the way. Bluetooth controlled devices work on Bluetooth technology for sending and receiving of data which uses short wavelengths (UHF Radio Waves). Bluetooth was designed to send data over short range and thus, its range spans up to 60 meters even with the new 4.0 version.

The IR systems which employ the infrared technology work only on the principle of line of sight. An IR transmitter device, generally a remote control, is directed to the device being controlled. Furthermore, the communication is fettered if there are obstacles and other hindrances.

In this paper, cellular phones using GSM network is used to control an unmanned vehicle (a robotic vehicle). This technique overcomes all the shortcomings of aforementioned technologies like network coverage issue, communication problems over obstacles and interferences and required line of sight. This technique is solely dependent on worldwide GSM network, which is up and running 24x7 and has very minimal interference. The unmanned vehicle is interfaced with a GSM network consisting of a GSM enabled cellular phone, DTMF decoder, Arduino Uno microcontroller board and two motors. Any GSM enabled cellular phone can be used, including low end black and white feature phones with basic function to high end Android OS / iOS operated smartphones. No special requirements are needed for two cellular phones. One is used as a transmitter (handheld remote controlled device) and other is used as a receiver interfaced with the unmanned vehicle.

Figure 1 and Figure 2 depicts the overall functionality of the system. A call is placed either from a fixed phone or a cellular phone to the cellular phone interfaced with the unmanned vehicle. The call takes place through GSM network. As soon as the call is received by a cellular phone, it is auto answered and the connection between the sender and receiver is established. During the call, if any button is pressed on the keypad of a fixed line or a cellular phone, a tone corresponding to the key pressed is generated. This tone is called as DTMF (Dual Tone Multiple Frequency). The

generated code is received by the DTMF decoder through the cellular phone's headphone output (3.5 mm audio jack). The DTMF microcontroller decodes the tones to resultant binary digits which are in turn sent to the Arduino Uno microcontroller board. The Arduino Uno controller board is programmed to make decision based on the input from the DTMF decoder and accordingly outputs the signals to the motors attached. The two motors help the unmanned vehicle to manoeuvre forwards, backwards, left and right. Since only two cellular phones are needed in order to place a call and establish connection, intricate transmitter and receiver are not needed, thus reducing overall complexity and complications of the circuit design.

III. SYSTEM OVERVIEW

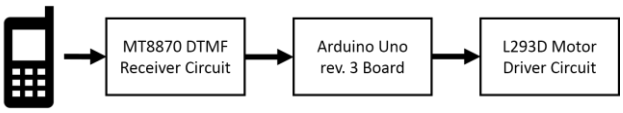

Figure 1: DTMF Communication Architecture

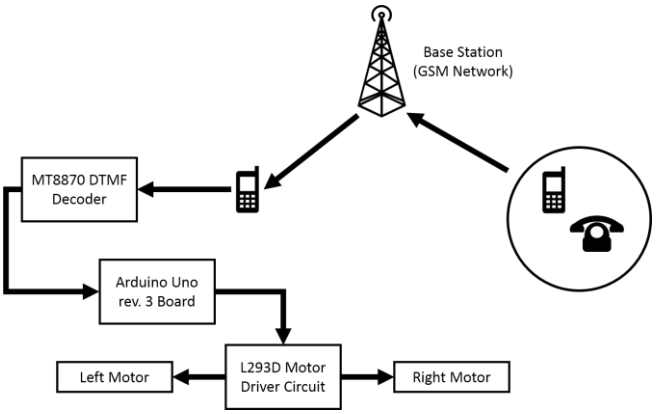

Figure 2: Functional block Diagram of the System

IV. SYSTEM COMPONENTS

The components used in this system are fairly simple and easily available on online stores, or electronic shops. They are:

- Robot chassis along with two wheels
- Two DC motors (60 – 500 RPM)
- Arduino Uno microcontroller board
- IC MT8870 (DTMF decoder)
- IC L293D (Motor driver)
- Miscellaneous components (Breadboard, Jumper wires, Batteries, Registers etc.)

V. HARDWARE COMPONENTS

In this section the hardware components illustrated in figure 2 are explained in detail.

A. DTMF Decoder

A basic Integrated Circuit of number MT8870 is used as the DTMF decoder. The function of the decoder is three stage:

1. Receive the DTMF tone generated by the cellular phone via 3.5 mm audio jack
2. Process the tone received and convert it into corresponding binary digit
3. Forward those digits to the Arduino for decision making

		Tone B [Hz]			
		1209	1336	1477	1633
Tone A [Hz]	697	1	2	3	A
	770	4	5	6	B
	852	7	8	9	C
	941	*	0	#	D

Figure 3: DTMF Frequencies

Figure 3 shows a table of frequencies that are used for a typical 4 X 4 keypad consisting of keys 1, 2, 3, 4, 5, 6, 7, 8, 9, 0, *, #, A, B, C, D. Low frequency is represented by a row and high frequency is represented by a column. When a key is pressed, superimposition of the two frequency is produced, thus generating a tone.

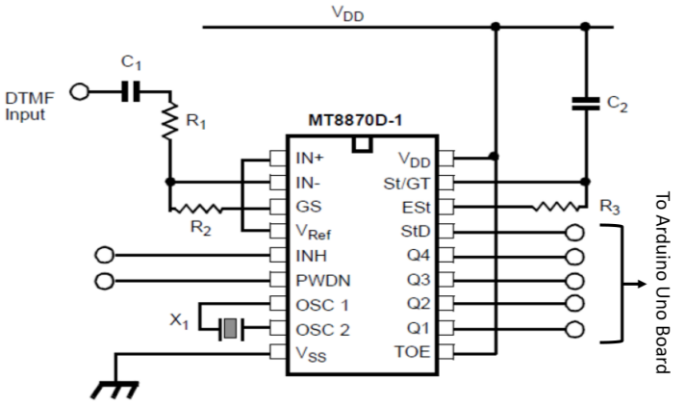

Figure 4: Circuit Diagram of IC MT8870

Figure 4 depicts a circuit diagram of the IC MT8870 DTMF decoder which takes the DTMF input from the cellular phone's 3.5 mm audio jack gives outputs on the pin number 11, 12, 13, 14 and 15 to Arduino Uno board. Pin 11 to 14 are the data output (Q1-Q4) while Pin 15 is the delayed steering output (StD).

B. Motor Driver

Integrated Circuit of number L293D is used in this system as the motor driver. This IC is very common across majority of robotics projects which deal with unmanned mobile vehicle. L293D is a dual H-Bridge motor driver and is capable of driving two DC motors simultaneously. With the help of this IC, the motors can be moved bidirectional. The L293D have two enable pins, i.e. Pin 1 and Pin 9, which need to be high in order to activate both the H-Bridges.

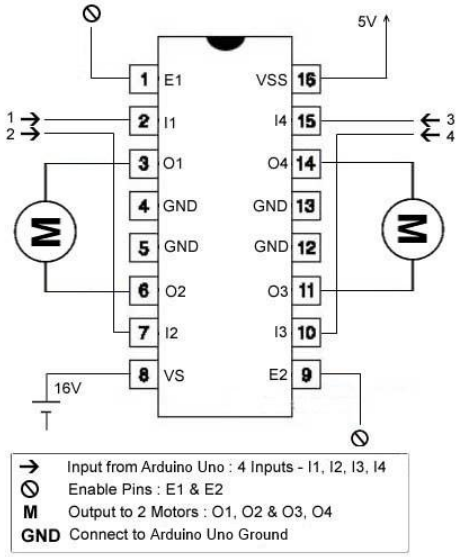

Figure 5: Circuit Diagram of IC L293D

A circuit diagram for L293D motor driver is shown in Figure [5]. The left motor is connected to Pin 3 and Pin 6. The right motor is connected to Pin 11 and Pin 14. Altogether these pins act as an output based on the input received through Pin 2 and Pin 7 for left motor and Pin 10 and Pin 15 for right motor from the Arduino Uno board.

Based on the voltages received from the input pins the motors

- spin forwards if the first pin is high and other is low
- spin backwards if the first pin is low and other is high
- halts if both the pins are low

Manipulating these motor movements, the unmanned vehicle can be manoeuvred in different directions. This is explained in Section VI.

C. Arduino Uno Board

The Arduino board is specially designed and developed for students for learning, experiment and research purpose. It is a single board system which is equipped with 8-bit Atmel AVR microcontroller. The board can be powered by a USB port as well as a DC adapter or a battery source. The Arduino Uno features 6 analogue input pins and 14 digital input/output pins for added functionality. Various shields like prototype shield, Wi-Fi shield, Bluetooth shield etc. can be added to the already feature rich Arduino. Figure 6 represents a typical Arduino Uno rev. 3 board.

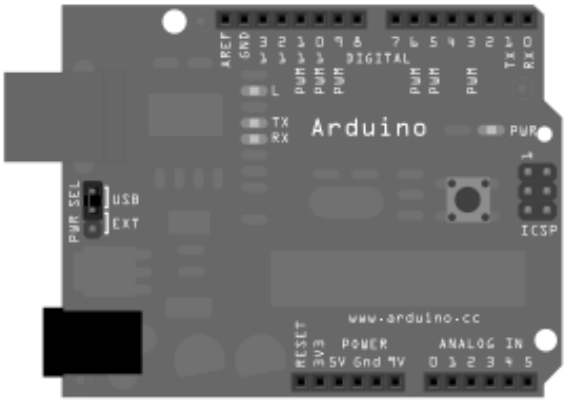

Figure 6: Arduino Uno Board Design

VI. STEERING ANALYSIS

Depending upon the movement of two motors, the unmanned vehicle can be manoeuvred in several directions. For the vehicle to steer

- Forwards – move both the motors forwards
- Backwards – move both the motors backwards
- Left – move the right motor forwards
- Right – move the left motor forwards

Mentioned above are the four basic manoeuvres of the unmanned vehicle. A detailed table containing the movements of right and left motors and the final movement of the vehicle is given in Figure 7.

Movement of Left Motor	Movement of Right Motor	Movement of the Vehicle
Forward	Forward	Forward
Forward	None	Right
None	Forward	Left
Backward	Backward	Backward
Backward	None	Left
None	Backward	Right
Forward	Backward	Sharp Right
Backward	Forward	Sharp Left
None	None	At Halt

Figure 7: Steer Analysis of two Motors and the Vehicle

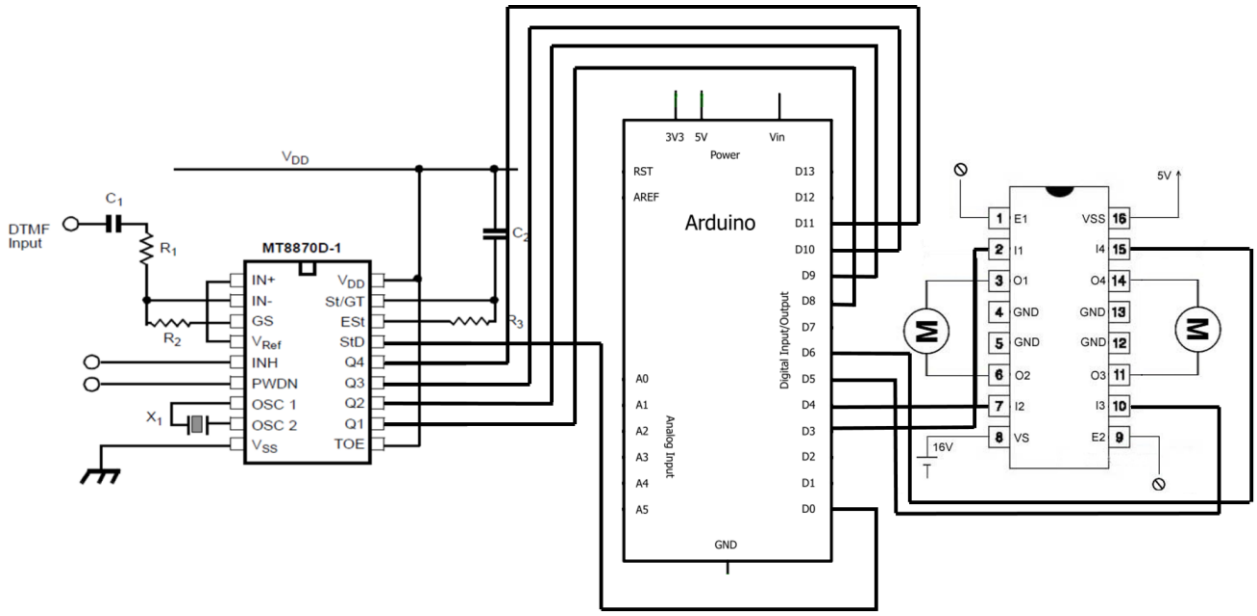

Figure 8: Circuit Design

VII. CIRCUIT DESIGN

Figure 8 depicts the circuit diagram of the system as a whole. In order to understand the circuit diagram, we first need to understand how the three components viz. the Arduino board, the MT8870 DTMF Decoder IC and the L293D Motor Driver IC are connected. DTMF decoder receives the input from DTMF tone acquired from the 3.5 mm audio jack (headphone output) of the cellular phone. The tones are parsed and decoded by the MT8870 DTMF Decoder and are passed to the Arduino Uno board as an input. The DTMF Decoder gives the output on Pin number 11, 12, 13, 14 and 15.

The output received from Pin 15 is connected to Digital Pin 0 of the Arduino Uno board. Other outputs from Pins 11, 12, 13 and 14 are connected to Digital Pins 8, 9, 10 and 11 respectively. Based on the equivalent binary digit of the DTMF tone received by the Arduino, a decision is made for Pins 3, 4, 5 and 6 regarding which pins should be high or low. These ultimately control the motors of the unmanned vehicle.

On the L293D IC, the outputs received from the Arduino Digital Pins 3, 4, 5 and 6 are fed to the L293D IC as input. Based on the Arduino's decision, the Pins are either high or low which activates the motors and moves the vehicle.

It is not a hard and fast rule to connect the Pins as per Figure 8. The user may connect it in any fashion comfortable to him, provided that he makes changes to the algorithm and program code accordingly.

VIII. SOFTWARE COMPONENTS

The Arduino Uno boards come equipped with an IDE (Integrated Development Environment) software. Writing programs in this IDE is fairly simple because the programs are written in C and C++, which is same as that of traditional microcontrollers, but with added functionality. For example, flashing of programs to the board i.e. uploading is just one mouse click job. Serial outputs can be viewed on a Serial Monitor which helps in debugging of code. A piece of code in Arduino IDE is called as a sketch.

IX. ALGORITHM

The algorithm for this system is very straight forward. Pressing a key on the keypad results into movement of vehicle in the corresponding direction. These are the actions performed based on the following key pressed:

- 2 – The vehicle moves forwards
- 8 – The vehicle moves backwards
- 4 – The vehicle takes a left
- 6 – The vehicle takes a right
- 1 – The vehicle takes a sharp left
- 3 – The vehicle takes a sharp right
- 5 – The vehicle halts in its position

X. PROGRAM CODE

The following is the program code developed in Arduino IDE

```
// Variables used
int dtmf;
String dial;

int Motor1Pin1 = 3;
int Motor1Pin2 = 4;
int Motor2Pin1 = 5;
int Motor2Pin2 = 6;

void setup() {
Serial.begin(9600);
dial = "";

// Arduino Outputs

pinMode(Motor1Pin1,OUTPUT);  //set pin 3 as output
pinMode(Motor1Pin2,OUTPUT);  //set pin 4 as output
pinMode(Motor2Pin1,OUTPUT);  //set pin 5 as output
pinMode(Motor2Pin2,OUTPUT);  //set pin 6 as output

// LED Output on pin 13
pinMode(13, OUTPUT);

// MT8870DE Outputs to Arduino Inputs
pinMode(8, INPUT);
// Significant bit 1, pin 11 on MT8870
pinMode(9, INPUT);
// Significant bit 2, pin 12 on MT8870
pinMode(10, INPUT);
```



```
// Significant bit 4, pin 13 on MT8870
pinMode(11, INPUT);
// Significant bit 8, pin 14 on MT8870
pinMode(7, INPUT);
// Significant StD
}

void loop() {
dtmf = 0;
if (digitalRead(8) == HIGH) dtmf = dtmf + 1;
if (digitalRead(9) == HIGH) dtmf = dtmf + 2;
if (digitalRead(10) == HIGH) dtmf = dtmf + 4;
if (digitalRead(11) == HIGH) dtmf = dtmf + 8;


if (dtmf == 1) dial = "1";
if (dtmf == 2) dial = "2";
if (dtmf == 3) dial = "3";
if (dtmf == 4) dial = "4";
if (dtmf == 5) dial = "5";
if (dtmf == 6) dial = "6";
if (dtmf == 7) dial = "7";
if (dtmf == 8) dial = "8";
if (dtmf == 9) dial = "9";
if (dtmf == 10) dial = "0";
if (dtmf == 11) dial = "*";
if (dtmf == 12) dial = "#";

Serial.println(dial);     // The digit contained in DTMF data

// Decisions based on the key pressed on the keypad

if(dial == "2")
{
  digitalWrite(13, HIGH);
  forward();
}
else if (dial == "8")
{
  digitalWrite(13, LOW);
  backwards();
}
else if (dial == "4")
{
  digitalWrite(13, LOW);
  left();
}
else if (dial == "6")
{
  digitalWrite(13, LOW);
  right();
}
else if (dial == "1")
{
  digitalWrite(13, LOW);
  sharpLeft();
}
else if (dial == "3")
{
  digitalWrite(13, LOW);
  sharpRight();
}
else if (dial == "0")
```



```
{
  digitalWrite(13, LOW);
  stopMotor();
}
}

// Maneuver functions

void forwards()
{
  digitalWrite(Motor1Pin1,LOW);
  digitalWrite(Motor1Pin2,HIGH);
  digitalWrite(Motor2Pin1,LOW);
  digitalWrite(Motor2Pin2,HIGH);

}
void backwards()
{
  digitalWrite(Motor1Pin1,HIGH);
  digitalWrite(Motor1Pin2,LOW);
  digitalWrite(Motor2Pin1,HIGH);
  digitalWrite(Motor2Pin2,LOW);
}
void right()
{
  digitalWrite(Motor1Pin1,LOW);
  digitalWrite(Motor1Pin2,HIGH);
  digitalWrite(Motor2Pin1,LOW);
  digitalWrite(Motor2Pin2,LOW);

}
void left()
{
  digitalWrite(Motor1Pin1,LOW);
  digitalWrite(Motor1Pin2,LOW);
  digitalWrite(Motor2Pin1,LOW);
  digitalWrite(Motor2Pin2,HIGH);
}
void sharpLeft()
{
  digitalWrite(Motor1Pin1,LOW);
  digitalWrite(Motor1Pin2,HIGH);
  digitalWrite(Motor2Pin1,HIGH);
  digitalWrite(Motor2Pin2,LOW);
}
void sharpRight()
{
  digitalWrite(Motor1Pin1,HIGH);
  digitalWrite(Motor1Pin2,LOW);
  digitalWrite(Motor2Pin1,LOW);
  digitalWrite(Motor2Pin2,HIGH);
}
void stopMotor()
{
  digitalWrite(Motor1Pin1,LOW);
  digitalWrite(Motor1Pin2,LOW);
  digitalWrite(Motor2Pin1,LOW);
  digitalWrite(Motor2Pin2,LOW);
}
```

XI. APPLICATION

There are many projects in real world where unmanned vehicles are used. There are also certain fields where unmanned vehicle can be introduced. The following few real world applications follow the key concept of using unmanned vehicle. This system is just a prototype built on these similar conceptual lines.

A. Military Operations

The use of unmanned vehicle in military is not a new concepts. For decades unmanned vehicles are used as a human substitute. These vehicles have paramount importance in military because no human life is in danger while the operation is being performed.

B. Aviation

The use of unmanned vehicle in case of commercial aviation is not popular, but certainly taken into consideration. However, its application in aviation other than commercial sector is widespread. An example would be Unmanned Aerial Vehicle (UAV) which does not facilitates a human pilot and is controlled remotely in order to perform military service, civil operations like firefighting and policing, surveillance etc.

C. Space Exploration

Unmanned probes are sent in outer space in order to carry out research and aid in exploring our limited knowledge of space and universe. The land rover sent on Mars called Curiosity is a perfect example of automated unmanned vehicle.

D. Rescue and Search Operations

There are some deleterious situations wherein the environment is new, hazardous or not suitable for human intervention. These conditions are mostly reflected in rescue and search operations where sending an unmanned vehicle is a perfect option.

E. Surveillance

Unmanned vehicles can also be used in civil operations like monitoring and surveillance. By doing so, the cost involved for the human workforce is drastically reduced.

XII. FUTURE SCOPE

The designed used for unmanned vehicle in this paper can further be improved and enhanced to meet suitable needs according to its application. A camera can be mounted on top of it which can send videos and images to the remote phone connected via 3G or 4G network. Sonar and infrared (IR) sensors can be added which will fully automate the unmanned vehicle, sending surrounding information via sonar sensors and detecting and avoiding objects using infrared sensors. This added functionality will help the vehicle to maneuverer on its own after it loses the GSM network coverage.

XIII. CONCLUSION

In this paper, the design and implementation of the unmanned vehicle is explained. Introduction of robotics followed by the conventional approach of unmanned vehicle with Wi-Fi, Bluetooth and Infrared along with its shortcomings is illustrated. These drawbacks are overcome using the descripted hardware and software components. The algorithm along with program code is demonstrated. In summary, an unmanned vehicle is developed, with help of Arduino board using GSM network and DTMF tone, which manoeuvres in different direction by pressing a key on the keypad of a cellular phone which acts as a remote and is connected to the cellular phone attached to the vehicle via voice call.

REFERENCES

[1] S. K. Saha, *Introduction to Robotics*, Tata McGraw-Hill Publishing Company (30 April 2008)
[2] John J Craig, *Introduction to robotics*, Pearson Education; Third edition (2010)
[3] Sourangsu Banerji, *Design and Implementation of an Unmanned Vehicle using a GSM Network with Microcontrollers*, International Journal of Science, Engineering & Technology Research, Vol.2, Issue.2, 2013
[4] IRobot Corporation, http://www.irobot.com/en/us/robots/defense.aspx
[5] Wikipedia, *Robotics*, http://en.wikibooks.org/wiki/Robotics
[6]] R. Sharma, K. Kumar, and S. Viq, *DTMF Based Remote Control System*, IEEE International Conference ICIT 2006, pp. 2380-2383, December 2006
[7] Abah O. Sunday, Visa M. Ibrahim, Abah Joshua, *Remote Control of Electrical Appliances Using GSM Networks*, International Journal of Engineering Research and Development, Volume 1, Issue 9 (June 2012), PP.38-45, ISSN: 2278-067X
[8] Emily Gertz, Patrick Di Justo, *Environmental Monitoring with Arduino*, O'Reilly; 1 edition (2 March 2012)
[9] Jeremy Blum, *Exploring Arduino*, John Wiley & Sons (9 August 2013)
[10] Massimo Banzi, *Getting Started with Arduino*, Shroff/O'Reilly; Second edition (4 October 2011)
[11] Harold Timmis, *Practical Arduino Engineering*, APress; New edition (23 November 2011)

ISSN: 2278 – 1323
International Journal of Advanced Research in Computer Engineering & Technology (IJARCET)
Volume 2, Issue 12, December 2013

WIRELESS BASED CLOSED LOOP AUTOMATION OF STREET LIGHT CONTROL USING PIR

V.VELLINGIRI [1] Dr.M.THIRUMARIMURUGAN[2] Dr. T.KANNADASAN[3]

Abstract :— Nowadays the maintenance of street light is one of the major problems for electricity Board. On the other hand it also has the problem to save the powers which are consumed by the street lights. To maintain and control the street light is more complex and economical. At present we are having various street light controlling systems. To advance the street light maintenance in the technologies related to wireless communication has led to fulfill the human requirements. In this paper I propose a new mechanism to maintain the street light with Automated ON-OFF control by using PIR and Power saving mechanism. Also implementing the wireless communication to facilitate and to receive the acknowledgement when the light is turned ON or OFF and also we check the status of the light (i.e. whether the light is ON or OFF) via sending SMS.

Keywords --- SMS, GSM, PIR, Street lights, Power, Microcontroller

I. Introduction

Electricity is the major demand in the developing countries like India. According to my thought most of the power is consumed by the street lights and also there is wastage of power by operating the street lights manually. Also the power wastage is assumed if there is no person or animals in the street sides, during this time if street is in OFF condition then some amount of power is saved. So, this paper gives the advanced system to maintain street lights and save the power wastage due the street light.

V.VELLINGIRI, Director for Sri Nandhanam Group of Institutions,Tirupattur,tamil nadu ,india-635601 *Mobile No.,* 91508 01635

Dr.M.THIRUMARIMURUGAN, Chemical Engineering, Assistant Professor,Coimbatore Institute of Technology Coimbatore - 641 014. Tamil Nadu, India
Mobile No., 09943549700

DR.T.KANNADASAN,Professor,Head Department of Chemical Engineering Coimbatore Institute of Technology Coimbatore Tamilnadu India-641014
Mobile No., -98941 00454

Also the board can reduce the maintenance cost and no. of persons needs to operate.At present the street light can be controlled by manual control and also in advance it can operated (ON and OFF) by sending SMS through GSM. But there is no system to monitor street light also no other system to provide the automatic ON and OFF by sensing humans and animals. If these factors are implemented then the wastage of power will be saved In proposed system we can control and monitor the street light with feedback module using Global Service for Mobile communication (GSM) via Short Message Service (SMS). Feedback module provide the acknowledgement for each SMS ,For example if a operator send a message as ON street light No1 after that the acknowledgement is received as 'YES' if the respective light is ON or else 'NO' if the respective light is unable to ON.

In rural areas at midnight the significance of the street light is very less. So here also the wastage of power is raised. To tolerate this wastage it is possible to operate the street light only when the human or an animal is seen near by the respective light. In proposed system we also implement one more application i.e. the automatic ON and OFF the street light when the human or an animal seen nearer to that light by sensing them using PIR module. This case is also combined with the feedback module. Feedback module provides the status of the light and also sends a message when the light turned ON and turned OFF via SMS.

This paper is organized as follows. We briefly review the related work is described in section II. Methodology is described in section III, Experimental results and performance analysis is presented in Section IV gives. Section V concludes the paper.

II. Related Work

A new design of high power factor low cost electronic ballast with intelligent energy saving control for water treatment system ultra-violet lamps (UVL) drive is described in [1] to obtain truly pure and safe drinking water. Street lighting control system based on power line communication on demand market is described in [2].
The feasibility of tapping into the Short Message Service component of existing mobile communications network infrastructure, particularly the GSM network to act as a medium for the communication of hydrogen sensors

control signals are discussed in [3]. Remote control equipment for monitoring and managing a street lighting system is presented in [4]. It is composed by a local control, realized by master boards located inside electrical panels and slave boards mounted on each lamp post, and by a remote control realized by a central unit for the remote communication with the local control system. Remote controllable and energy-saving room architecture proposed in [5] to reduce standby power consumption and to make the room easily controllable with an IR remote control of a home appliance. The concept of a double layer capacitor (super capacitor) based hybrid power train for light rail vehicles and city bus is presented in [6]. The simulations of the hybrid power train and first practical test-bench results which have been recorded from a prototype inverter made for integration into a diesel electric bus are also presented in [6]. Energy efficient and low cost solution for street lighting system using GSM and General Packet Radio Service (GPRS) has been discussed in [7]. Paper presents design and prototype implementation of a basic home automation system based on SMS technology. The describes system consists of two main components; the GSM modem, which is the communication interface between the home automation system and the user. GSM modem uses SMS technology to exchange data, and signaling between users and home automation system [8]. Design of Intelligent Traffic Light Controller Using Embedded System describes the light controlling performance evaluation using GSM [9]. The H/W design of new street light control system designed by using Zigbee communication protocol is described in [10].

III. Methodology

The Block diagram of the proposed system is shown in fig 1. It mainly consists of Power supply unit, PIR Module, GSM modem, Microcontroller and feedback unit. The main components used for power supply circuit is 1 Transformer, 2 Diodes, 1000uF Filter Capacitor, LM7805, 3PIN Voltage Regulator.

The block diagram gives the simplest working of the proposed system. In the receiver side of the GSM modem is using the regulated voltage of 5V which is being generated by the power supply circuit.The 230V 50 Hz AC supply from the main electric line is used to feed the power supply circuit to generate 5V regulated supply for energizing the microcontroller and GSM modem. The power supply circuit consists of a centre tap transformer, Rectifier made of full wave rectifier circuit and filter circuit which provides a regulated 5V supply.

Regulator is used to regulate the output from the Transformer to the required voltage level. In a typical 12-0-12 transformer with a bridge rectifier and a filter the output voltage is unregulated 12V DC, if the desired output voltage is 5V then a required regulator needs to be used. 7805 regulator indicates positive voltage with 5 volts as the output.

The GSM modem is used for a duplex wireless communication. The authenticated operator mobile is configured with SIM (Subscriber Identification Module) which is inserted in the GSM modem. The message is sent in text format which received and extracted and fed to Microcontroller (ATMEL 89C51). The microcontroller uses the SMS received by GSM modem and switch the street-light ON/OFF. The microcontroller has in-built memory which is used to store the code which in turn controls the load.

The microcontroller used in the receiver side helps in decoding the AT commands and taking decisions. The load which is street-light in our project is connected to microcontroller. Using solid state relay, we switch ON/OFF the street-light. The solid state relay which accepts the triggering voltage from microcontroller is separated from the 230V 50Hz AC supply by using suitable opto-isolator. The power electronic devices like thyristors are used to implement solid state relay. The street-light is embedded with a photodiode to achieve feedback. The photodiode produces voltage according to the intensity of the street-light and informs the microcontroller whether the light is ON/OFF.

Block diagram

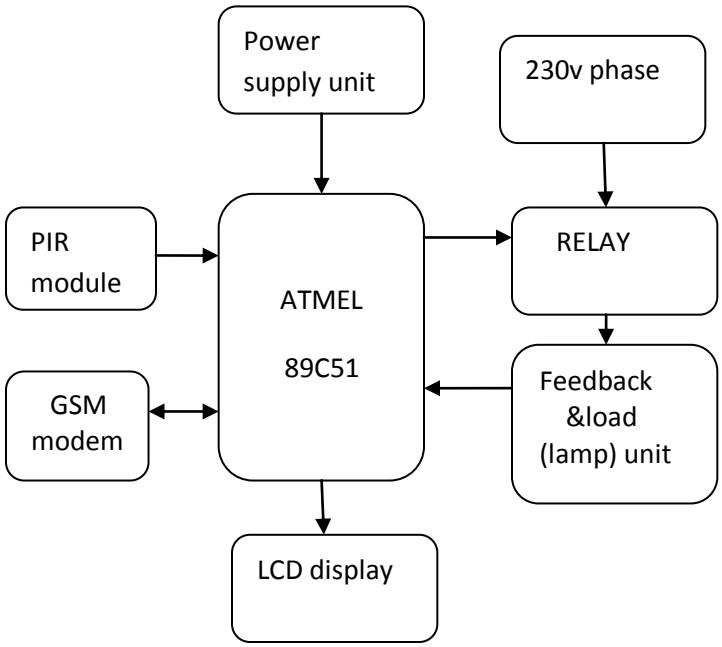

Fig 1 Block diagram.

The PIR (Passive Infra-Red) Sensor is a pyroelectric device that detects motion by measuring changes in the infrared levels emitted by surrounding objects. This motion can be detected by checking for a high signal on a single I/O pin which operates on 5V supply. The PIR sensor has elements made of a crystalline material that generates an electric charge when exposed to infrared radiation. The changes in the amount of infrared striking the element change the voltages generated, which are measured by an on-board amplifier. The device contains a special filter called a Fresnel lens, which focuses the infrared signals onto the element. As the ambient infrared signals change rapidly, the on-board amplifier trips the output to indicate motion. It sense the Human or animals near by the respective light. If the PIR sense anything nearer to the light, causes the change in amount of infrared striking the element change the voltage generated. Hence suddenly the microcontroller switch ON the respective light and send the signal to the GSM modem to send the information about that respective light

The feedback unit consists of the SN74LS245 is an Octal Bus Transmitter/Receiver designed for 8-line asynchronous 2-way data communication between data buses. Direction Input (DR) controls transmission of Data from bus A to bus B or bus B to bus A depending upon its logic level. The important feature of this is 2-Way Asynchronous Data Bus Communication. It receives the control signal and sends the acknowledgement to the operator.

IV. Experimental result and Performance

Initially set a baud rate of 9.6 Kbps between the GSM modem and Microcontroller. The GSM modem is initialized. The microcontroller configures port-O as input port. The GSM modem then scans for any new message. If a new SMS is received, the phone number and message is extracted from it. If the received massage is in the correct format the microcontroller proceed for the further operation such as switching ON the lights, checking the switch status, turning OFF the lights etc.

If the received command is for switch ON/OFF the light, after proceeding the operation the microcontroller check for status of the respective light and then send the respective command as an acknowledge.

For e.g. the operator send an message as Lamp 1 ON. The microcontroller receive the message and switching the Lamp 1 to ON, after a second it check for status of the light. If the Lamp1 is in ON status then the microcontroller send acknowledge as Lamp1 ON.

Also PIR module fixed with all the device to detect the human or animals nearby the correspondence light. PIR can detect up to 20 feet from the device. If the PIR detects human then the respective is turned ON and send a message to the operator as the Lamp (NO) is ON. For e.g. if a person cross the Lamp 1 the the microcontroller switch the Lamp 1 and send a massage as Lamp 1 ON to the operator. Following fig will show the operational massage display,

Fig 2 Describes the message send by an operator to ON Lamp 1 and to OFF Lamp 2. Fig 3 gives the acknowledgement for the message send by an operator. Always the Acknowledgement contains the information of some set of lights which is configured with that switch.

Fig 2 Message send by an Operator to ON Lamp

Fig 3 acknowledgement received by an operator

If the operator want know the status of the lights, then send a message as STATUS after the microcontroller receives the message and send acknowledgement as shown in Fig 4, describes status of set of lights to the microcontroller.

Fig 4 Message send by an operator to check status

V. Conclusion

In most of the countries, mainly the power wastage is occurred due to the street lights and also man power is very less. If every country installed this proposed system then there will be lot of power and manual operators can be saved. Proposed system wireless based closed loop automation of street light control using PIR. It is a low cost, remote controlling and monitoring of the street-lights. It has a more time efficient way to switch ON/OFF street-lights. Up to 70% of manual operator and power wastage can be reduce by implementing the proposed system. It provides an effective measure to save energy by preventing unnecessary wastage of electricity, caused due to manual switching or lighting of street-lights when it is not required. This concept can also be used to control lighting system of industrial areas, college or university campus. The proposed system may also be used for home security and automation.

VI.Reference

1. Shun-Chung Wang Chi-Feng Su Chien-Hung Liu, "High Power Factor Electronic Ballast with Intelligent Energy Saving Control for Ultraviolet Lamps Drive", 0-7803-9208-6/05/$20.00 © 2005 IEEE

2. SungKwan Cho, Vijay Dhingra, "Street Lighting Control based on LonWorks Power Line Communication", 978-1-4244-1976- 0/08/$25.00©2008 IEEE.

3. Daniel J.S. Lim, Vishy Karri, "Remote monitoring and control for the Hydrogen safety via SMS", 1 st International Conference on Sensing Technology November 21-23, 2005 Palmerston North, New Zealand.

4. R. Caponetto, G. Dongola, L. Fortuna, N. Riscica and D. Zufacchi, "Power Consumption Reduction in a Remote Controlled Street Lighting System", SPEEDAM 2008 International Symposium on Power Electronics, Electrical Drives, Automation and Motion, Page 428-433.

5. Jinsoo Han, Haeryong Lee, and Kwang-Roh Park, "RemoteControllable and Energy-Saving Room Architecture based on ZigBee Communication", IEEE Transactions on Consumer Electronics, VoL 55, No. 1, FEBRUARY 2009. Page 264-268.

6. A. Lohner and W. Evers, "Intelligent Power Management of a Super-capacitor based Hybrid Power Train for Light-rail Vehicles and City Busses" 2004 351 h Annual IEEE Power Electronics Specialists Conference Aachen, Germany, 2004.

7. C.Maheswari, RJeyanthi, Dr.K.Krishnamurthy, M.Sivakumar "Implementation of Energy Management Structure for Street Lighting Systems", Modern Applied Science June, 2009.

8. ElKamchouchi, H. ElShafee, A. " Design and prototype implementation of SMS based home automation system" Electronics Design, Systems and Applications (ICEDSA), 2012 IEEE International Conference on 5-6 Nov. 2012.

9. Chavan, S.S Deshpande, R.S. ; Rana, J.G. "Design of Intelligent Traffic Light Controller Using Embedded System"Emerging Trends in Engineering and Technology (ICETET), 2009 2nd International Conference on 16-18 Dec. 2009.

10. J. D. Lee, K.Y. Nam, S.H. Jeong, S.B. Choi, H.S. Ryoo, D.K. Kim, "Development of Zigbee based Street Light Control System", 142440178X106/$20.00 ©2006 IEEE, PSCE 2006. Page 2236-2240

Received the B.E degree from coimbatore institute of technology, India in 1995. He received M.E degree from SR University in 2008. At present he is working as Director for sri nandhanam group of institutions, and doing research in Mobile Communication & Embedded System under Anna University- coimbatore.

Received the B.Tech degree from Bharathiar University Coimbatore, India in 1995. He received M.Tech degree from Bharathiar University Coimbatore in 1997. At present he is working as Associate Professor for Coimbatore Institute of Technology, doing research Chemical Engineering.

At present he is working as Head of Chemical Engineering Department *at* Coimbatore Institute of Technology, Coimbatore, doing research Chemical Engineering.

E-VOTING SYSTEM USING MOBILE SMS

Dinesh R. Gawade[1], Amardeep A.Shirolkar[2], Sagar R. Patil[3]

[1]B.Tech (ECT), B.A. (PSY)Student, Department of Technology, Shivaji University, Kolhapur, MS, India.
[2]M.Tech (Embedded system) Assistance Professor, Department of Technology, Shivaji University, Kolhapur, MS, India.
[3]M.Tech(ECE) Lecturer, Parikrama Polytechnic Kashti, Ahmednagar India.

Abstract:

E-Electronic voting system have the potential to improve percentage of the voting. In the traditional voting, such as, the electronics voting and paper based voting, percentage of voting is decreasing. Now a day's most of voters are busy in their work and most of the voters are living far away from voting centre. some voters don't like to wait in queues. Thus, due to this, voters don't visit to the polling booth. Thus, percentage of voting is decreasing, which is main and serious drawback of traditional voting scheme. Now a day's some improvement is needed in this field. Thus, in this paper we are introducing such a system, which will eliminate drawback of traditional voting scheme. This new voting scheme is based on SMS. SMS is a key future of the second generation(2G) mobile. In the second generation , GSM (global system for mobile communications) is very famous technology. In next generation of mobile, such as 2.5G, 2.75G, 3G & 4G, SMS is one of the prime features. So we implement a new voting system, based on SMS. mobile telephony is widely used, there are more than 6,800,000,000 mobile users worldwide and population of the voter in world is 7,012,000,000 that is 96.97% voter use mobile worldwide. In these paper an electronic voting system using SMS is presented but to care of the remaining 212,000,000 voter that is 3.03% of the voter will use the traditional electronic voting machine as it is. Considering the major crowd of mobile users we developed modified voting machine which support both electronic voting machine and SMS based voting. we are able to exploit existing mobile authentication mechanism and provide enhance voter authentication with mobility while maintaining voter privacy. now days additional problem is of declaring the result of voting, So to declare result normally 8-10 days will be taken. in this day security of voting machine is prime question and very large cost paid for this. in our modified voting machine we can declare result within 1hr of voting and also the voting result send to all registered mobile number.

Keyword: *SMS, Electronic voting machine, E-electronic voting machine, SMS based voting.*

----------***----------

1. INTRODUCTION

E-Electronic voting system have the potential to improve percentage of the voting. in the traditional voting such as the electronics voting and paper based voting percentage of voting is decreasing. now a day's most of voters are busy in his /her work and most of the voter are living far away from voting centre some voter don't like to wait in queues thus due to these voters don't visit to the pooling booth and Percentage of voting is decreasing. these is main and seriousdrawback of traditional voting scheme. now a day's some improvement needed in this field, in this paper we are introducing such a system which eliminate drawback of traditional voting scheme and this new voting scheme is based on SMS [1,2] . Now we are developed modified electronic voting machine (MEVM). we can call this voting machine as Mobile-Electronic voting machine(M-EVM). This is embedd with two features, first for those voter who don't have an mobile. such voter can vote going physically in voting centre and pressing the key in front of his/her candidate symbol. Second for those voter having mobile and living in remote place from voting centre or those who don't like to wait in queues or don't have time such voter can vote using his/her personal mobile by sending an SMS. First facility is same like traditional voting machine. So we focused on second facility, in this important is voter mobile number which must be registered and synchronised with name in M-EVM database. Using only such registered mobile number voter can vote. In this voter send the SMS to M-EVM and M-EVM give response to such mobile number and take vote of particular voter. Once the vote of the particular persons is taken then mobile number of respective person is blocked. So once vote massage is done voting again to that respective person not possible. In this system voter first send a massage “candidate info” to M-EVM Then M-EVM give reply of all candidate name like A) ABC, B) XYZ etc. then voter reply this massage likewise A or B. then voting of such voter is done and vote is taken. If voter replies more than one option then vote of such voter is unsuccessful and unable to vote again. After voting voter receives massage of successful or unsuccessful voting[3]. we are able to exploit existing mobile authentication mechanisms and provide enhanced voter authentication, while maintaining voter privacy. voting result is declared in 1hr after voting and result will send all registered mobile number.

2. PROBLEM STATEMENT:

Now a day's most of voters are busy in his /her work and most of the voter are living far away from voting centre some voter don't like to wait in queues thus due to these voters don't visit to the pooling booth and Percentage of voting is decreasing. Now a days voting system is somehow

complicated and time consuming now. this process is such as voter manually going to an voting centre and shows voter card (Id) to the voting officer. this voting card will be issued for getting the authentication during the actual process of voting at the station. where they believe that their names are made available and if so after authentication With this, a voters' list will be generated for each constituency. then name of the such voter will be search in the list and then each voter will then have to go to a polling station and then such person will cast their vote by placing a mark against the political party symbol of their choice[4,5]. In some cases, on the voter's right index finger, an indelible ink mark is made to show that this person has already voted and so the voter cannot vote again. this is all time consuming process. also the large man power is needed for checking voter id, voter list and marking the figure and at each polling station. so election commission have need to pay the so much cost for this man power. After the voting schedule is complete, voting station officer will then take the ballot boxes or electronic voting machine to a centralized place, then declare the voting results after 8-10 days. during this day security of this is big problem. for this large manpower is need and election commission pay so much cost for this.

2.1 Proposed System:

Now we are developed modified electronic voting machine (MEVM). we can call this voting machine is E-Electronic voting machine(M-EVM). This has two facility, first for those voter don't have an mobile is voter. such voter can be vote going physically in voting centre, like pressing the key in front of his/her candidate symbol. Second for those voter have mobile and living remote place from voting centre, don't like to wait in queues, don't have time such voter can vote using his/her personal mobile to sending the SMS. First facility is same like traditional voting machine. So we focused on second facility, in this important is voter mobile number[6,7] is must registered in M-EVM database. Using only such registered mobile number voter can be vote. In this voter send the SMS to M-EVM and M-EVM give response to such mobile number and take vote of particular voter. Once the vote of the particular persons is taken then mobile number of such particular person is blocked. So once person was done voting he/her unable to vote again. In this system voter first send massage "candidate info" to M-EVM Then M-EVM give reply of all candidate name like A) ABC, B) XYZ etc. then voter reply this massage likewise A or B. then voting of such voter is done and vote is taken. If voter reply more than one option then vote of such voter is unsuccessful and unable to vote again. After voting voter receives massage of successful or unsuccessful voting. for the security we can generate the special list of mobile voted result in personal computer/ laptop and this list is updated automatically whenever any voter votes . voting officer cross check the voter, search the name of each voter in this list for the instant result facility we can connect M-EVM to the personal computer/ laptop via USB, and division wise all personal computer and laptop then connected to each other using the LAN. voting summation of the each candidate from each division done in respective division personal computer/ laptop. then we will display the result after 1 hr of voting. SMS of the result is send all the registered mobile number.

2.2 System Implementation:

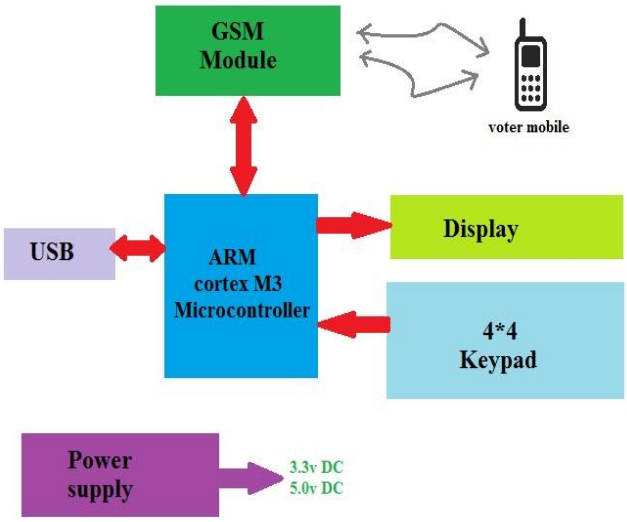

Fig. 1 block diagram

2.3 Arm Cortex M3:

The STM32F103RCT6 [9] medium-density performance line family incorporates the high performance ARM Corte-M3 32-bit RISC core operating at a 72 MHz frequency, high speed embedded memories (Flash memory up to 128 Kbytes and SRAM up to 20 Kbytes), and an extensive range of enhanced I/Os and peripherals connected to two APB buses. All devices offer two 12-bit ADCs, three general purpose 16-bit timers plus one PWM timer, as well as standard and advanced communication interfaces: up to two I2Cs and SPIs, three USARTs, an USB and a CAN. The devices operate from a 2.0 to 3.6 V power supply. They are available in both the –40 to +85 °C temperature range and the –40 to +105 °C extended temperature range. A comprehensive set of power saving mode allows the design of low power applications. The STM32F103R medium density performance line family includes devices in six different package types: from 36 pins to 100 pins. Depending on the device chosen, different sets of peripherals are included the description below gives an overview of the complete
range of peripherals proposed in this family.

2.4 Universal Serial Bus (Usb):

USB was designed to standardize the connection of computer peripherals to personal computers, both to communicate and to supply electric power. It has become commonplace on other devices, such as smart phones, PDAs. USB has effectively replaced a variety of earlier interfaces, such as serial and parallel ports, as well as separate power chargers for portable devices. In our device we use USB 2.0 adding a higher maximum signaling rate of 480 Mbit/s called High Speed, in addition to the USB 1.x Full Speed signaling rate of 12 Mbit/s. Due to bus access

constraints, the effective throughput of the High Speed signaling rate is limited to 35 MB/s or 280 Mbit/s. [10]. Further modifications to the USB specification have been made via Engineering Change Notices 1.1.(ECN).

2.5 GSM Moule:

GSM(Global System Mobile) is a digital communication system which has rapidly gained acceptance and market sheared worldwide. Mobile services based on GSM technology were first launched in Finland. GSM, together with other technologies, is part of the evolution of wireless mobile telecommunications that includes High-Speed Circuit-Switched Data (HCSD), General Packet Radio System (GPRS), Enhanced Data GSM Environment (EDGE), and Universal Mobile Telecommunications Service (UMTS). GSM is a digital wireless communication protocol for mobile phones. It is provided with many other useful features such as security, authentication and the ability to switch phones without the need to reconfigure the phone with the existence of the SIM card. The GSM network can be divided into three parts.

- Mobile Station
- Base Station
- Network Subsystem

3. FLOWCHART:

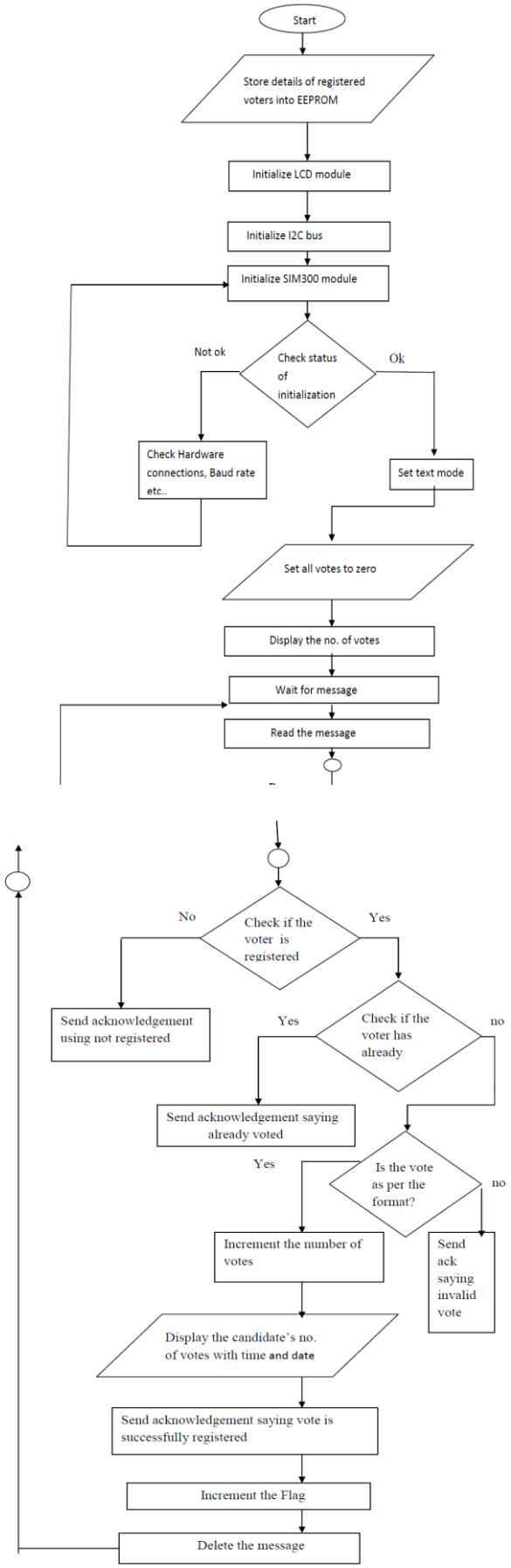

Fig 2. Flowchart

4. RESULT

Fig 3. Candidate info massage

Fig 4. Vote successful

Fig 5. Vote unsuccessful

Fig 6. Voter blocked

Fig 7. voting result

5. CONCLUSION

By referring this paper security performance is improved, avoid the security tensions and also avoid the queue in the voting time at polling booth. Voter can cast his or her vote easily from any place in given time. It can saves the time of the voter and avoid the forgery votes. Authentication is always a difficult requirement to fulfill for remote voting schemes, most of which apply a public Computer Science & Information Technology (CS & IT) 303 key based signature scheme for voter authentication. In our scheme, by using the existing GSM authentication infrastructure, the public-key overhead is largely reduced. Our scheme also enhances the security and provides more mobility and convenience to voters. In this paper, we presented the basic structure and protocol of our GSM based mobile voting system.

REFERENCES

[1]. Burmester, M., Magkos, E., :Towards secure and practical e-elections in the new era. In D. Gritzalis,editor, Secure Electronic Voting, pages 63–72. Kluwer Academic Publishers, (2003).

[2]. Chaum, D.,: Untraceable electronic mail, return addresses, and digital pseudonyms. Communications of the ACM, 24(2):84–88, February (1981).

[3]. R. Mercuri, “A Better Ballot Box?” IEEE Spectrum,

[4]. Vol.39, No.10, 2002, pp.46-50. [4] Chaum, D., : The dining cryptographers problem: Unconditional sender and recipient untraceability.Journal of Cryptology, (1):65–75, (1988).

[5]. Hirt ,M., Sako, K.,: Efficient receipt-freesvoting based on homomorphic encryption. In B. Preneel,editor, Advances in Cryptology— EUROCRYPT ’00, volume 1807 of Lecture Notes in Computer

[6]. ETS 300 506. Security aspects (GSM 02.09 version 4.5.1), Digital cellular telecommunications system (phase 2), (2000).

[7]. Fujioka, T., Okamoto, K.,Ohta :A practical secret voting scheme for large scale elections. In J. Seberry and Y. Zheng, editors, Advances in Cryptology—Auscrypt’92, volume 718 of Lecture Notes in Computer Science, pages pp. 244–251, Gold Coast, Queensland, Austrailia, 13-16 December 1992. Springer Verlag,(1992).

[8]. T. M. Carbaugh, “Secretary of State Kevin Shelley Announces Directives To Ensure Voter Confidence in Electronic Systems,” California Secretary of State,2003). Science, pages 539 556. Springer-Verlag, May (2000).

[9]. “ARM Cortex M3”, [Online] Available: http://www.st.com

[10]. 5.5.4". Universal Serial Bus Specification (Technical report). 2000. p. 40. v2.0.

ABOUT AUTHOR

Mr. Dinesh R. Gawade is currently pursuing his B.Tech degree in electronics and communication technology at department of technology, Shivaji University Kolhapur, India. He was received diploma in electronics telecommunication engineering from MSBTE Maharashtra, India in 2013, He was received B.A. degree in psychology from yashwantrao chavan Maharashtra Open University, Nashik, India in 2014. He published more than two research paper in international journal. His research interests include embedded systems, wireless sensor networks, healthcare systems, electronic measurement techniques and mobile applications

Mr. Amardeep A. Shirolkarwas received Diploma in Industrial Electronics from Government Polytechnic, Kolhapur, Maharashtra, India in 1991 and B.E. degree in electronics engineering from Shivaji University, Kolhapur, India in 1995. He was also received M.Tech degree in Electronics Technology from the same university in 2010. He is currently working as Assistant Professor of electronics and communication Technology at Department of Technology in Shivaji University, Kolhapur,India. He published research papers in national and international conferences. His research interests include embedded systems, signal processing, image processing, wireless sensor networks, healthcare systems, electronic measurement techniques.

Mr. Sagar R. Patil was received B.E. degree in electronics engineering from collage of engineering Hadpsar, Pune India in 2010. He was received M.Tech degree in electronics and communication engineering from st. Marry group of institution, Hydrabad India in 2014. He is currently lecturer of electronics and telecommunication department in Parikrama Polytechnic kashti, India. He published more than two research paper in international journal. His research interests include embedded systems, wireless sensor networks, healthcare systems, electronic measurement techniques, power electronics and control system.